DSC2311

Crystal-less™ Configurable Two-Output Clock Generator

Features

- Two Simultaneous CMOS Outputs
  - Output 1 Range: 2.3 MHz to 170 MHz
  - Output 2 Range: 2.3 MHz to 170 MHz
- Low RMS Phase Jitter: <1 ps (typ.)
- High Stability: ±25 ppm, ±50 ppm
- Wide Temperature Range
  - Automotive: –40˚C to +125˚C
  - Ext. Industrial –40˚C to +105˚C
  - Industrial –40˚C to +85˚C
  - Ext. Commercial –20˚C to +70˚C
- High Supply Noise Rejection: –50 dBc
- High Shock and Vibration Immunity
  - Qualified to MIL-STD-883
- High Reliability
  - 20x higher MTBF than crystal-based clock generator designs
- Supply Range of 2.25V to 3.6V
- Lead Free and RoHS-Compliant

Applications

- Consumer Electronics
- Camera and Imaging Modules
- Home Automation
- Industrial and Power Conversion
- Mobile Communications, Internet, and Sensor Devices
- Solid State, Hard Drive, and Flash Drive Storage

General Description

The DSC2311 is a crystal-less™ clock generator that is factory-configurable to simultaneously output two separate frequencies from 2.3 MHz to 170 MHz. The clock generator uses proven silicon MEMS technology to provide low jitter and high frequency stability across a wide range of supply voltages and temperatures. By eliminating the external quartz crystal, crystal-less clock generators significantly enhance reliability and accelerate product development, while meeting stringent clock performance criteria for a variety of consumer electronics, communications, and storage applications.

DSC2311 has an Output Enable/Disable feature that allows it to disable the outputs when OE is low. The device is available in a space-saving 6-pin 2.5 mm x 2.0 mm crystal-less VDFN package that uses only a single external bypass capacitor. This requires a PCB footprint equivalent to that of a 1.0 mm x 1.0 mm crystal-based clock generator.

Block Diagram

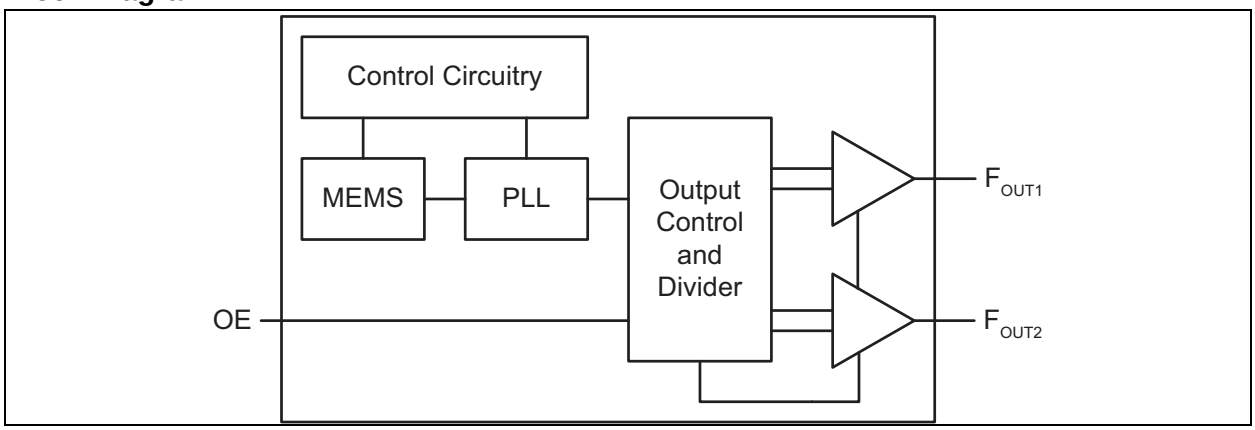

© 2016 Microchip Technology Inc.

1.0 ELECTRICAL CHARACTERISTICS

Absolute Maximum Ratings †

Supply Voltage ..... –0.3V to +4.0V
Input Voltage ..... –0.3V to V_{DD}+0.3V
ESD Protection (HBM) ..... 4 kV
ESD Protection (CDM) ..... 1.5 kV

† **Notice:** Stresses above those listed under "Absolute Maximum Ratings" may cause permanent damage to the device. This is a stress rating only and functional operation of the device at those or any other conditions above those indicated in the operational sections of this specification is not intended. Exposure to maximum rating conditions for extended periods may affect device reliability.

ELECTRICAL CHARACTERISTICS

Specifications: V_{DD} = 3.3V; T_A = +25°C unless otherwise specified.

Parameters	Sym.	Min.	Typ.	Max.	Units	Conditions
Supply Voltage (Note 1)	V_{DD}	2.25	—	3.6	V	—
Supply Current (Note 2)	I_{DD}	—	21	23	mA	EN pin low. All outputs disabled.
Frequency Stability (Note 3)	Δf	—	—	±25	ppm	Includes frequency variations due to initial tolerance, temperature, and power supply voltage.
		—	—	±50		
Aging	Δf	—	—	±5	ppm	One year at +25°C
Start-up Time (Note 4)	t_{SU}	—	—	5	ms	T = +25°C
Input Logic Levels	V_{IH}	0.75 x V_{DD}	—	—	V	Input logic high
	V_{IL}	—	—	0.25 x V_{DD}		Input logic low
Output Disable Time	t_{DA}	—	—	5	ns	—
Output Enable Time	t_{EN}	—	—	20	ns	—
Pull-Up Resistor (Note 2)	—	—	40	—	kΩ	Pull-up exists on all digital IO
Output Logic Levels	V_{OH}	0.9 x V_{DD}	—	—	V	Output logic high, I = ±6 mA
	V_{OL}	—	—	0.1 x V_{DD}		Output logic low, I = ±6 mA
Output Transition Time	t_R	—	1.1	2.0	ns	Rise time. 20% to 80%; C_L = 15 pF
	t_F	—	1.4	2.0		Fall time. 20% to 80%; C_L = 15 pF
Frequency	f_0	2.3	—	170	MHz	Commercial/Industrial temp. range
		3.3	—	100		Automotive temp. range
		3.3	—	170		Extended Industrial temp. range

Note 1: Pin 4 V_{DD} should be filtered with a 0.01 µF capacitor.
2: Output is enabled if Enable pad is floated or not connected. Operating current = disabled current + ΔI_{DD} from F_{OUT1} + ΔI_{DD} from F_{OUT2}. See Current Consumption graph for more information.
3: For other ppm stabilities, please contact the factory.
4: t_{SU} is time to 100 ppm stable output frequency after V_{DD} is applied and outputs are enabled.
5: Period jitter includes crosstalk from adjacent output.

© 2016 Microchip Technology Inc.

ELECTRICAL CHARACTERISTICS (CONTINUED)

Specifications: V_{DD} = 3.3V; T_A = +25°C unless otherwise specified.

Parameters	Sym.	Min.	Typ.	Max.	Units	Conditions
Output Duty Cycle	SYM	45	—	55	%	—
Period Jitter (Note 5)	J_{PER}	—	3	—	ps_{RMS}	F_{O1} = F_{O2} = 25 MHz
Integrated Phase Noise	J_{CC}	—	0.3	—	ps_{RMS}	200 kHz to 20 MHz @ 25 MHz
		—	0.38	—		100 kHz to 20 MHz @ 25 MHz
		—	1.7	2		12 kHz to 20 MHz @ 25 MHz

Note 1: Pin 4 V_{DD} should be filtered with a 0.01 µF capacitor.

2: Output is enabled if Enable pad is floated or not connected. Operating current = disabled current + ΔI_{DD} from F_{OUT1} + ΔI_{DD} from F_{OUT2}. See Current Consumption graph for more information.

3: For other ppm stabilities, please contact the factory.

4: t_{SU} is time to 100 ppm stable output frequency after V_{DD} is applied and outputs are enabled.

5: Period jitter includes crosstalk from adjacent output.

© 2016 Microchip Technology Inc.

TEMPERATURE SPECIFICATIONS (Note 1)

Parameters	Sym.	Min.	Typ.	Max.	Units	Conditions
Temperature Ranges						
Operating Temperature Range (T)	T_A	–20	—	+70	°C	Ordering Option E
	T_A	–40	—	+85	°C	Ordering Option I
	T_A	–40	—	+105	°C	Ordering Option L
	T_A	–40	—	+125	°C	Ordering Option M
Junction Temperature	T_J	—	—	+150	°C	—
Storage Temperature Range	T_S	–40	—	+150	°C	—
Soldering Temperature Range	—	—	—	+260	°C	40 sec. max.

Note 1: The maximum allowable power dissipation is a function of ambient temperature, the maximum allowable junction temperature, and the thermal resistance from junction to air (i.e., T_A, T_J, θ_{JA}). Exceeding the maximum allowable power dissipation will cause the device operating junction temperature to exceed the maximum +125°C rating. Sustained junction temperatures above +125°C can impact the device reliability.

© 2016 Microchip Technology Inc.

2.0 PIN DESCRIPTIONS

The descriptions of the pins are listed in Table 2-1.

TABLE 2-1: PIN FUNCTION TABLE

Pin Number	Pin Name	Description
1	ENABLE	Output Enable for both CLK0 and CLK1.
2	N/C	Do not connect.
3	GROUND	Ground.
4	CLK0	Clock Output 0 (CMOS).
5	CLK1	Clock Output 1 (CMOS).
6	VDD	Supply Voltage.

3.0 OUTPUT WAVEFORM

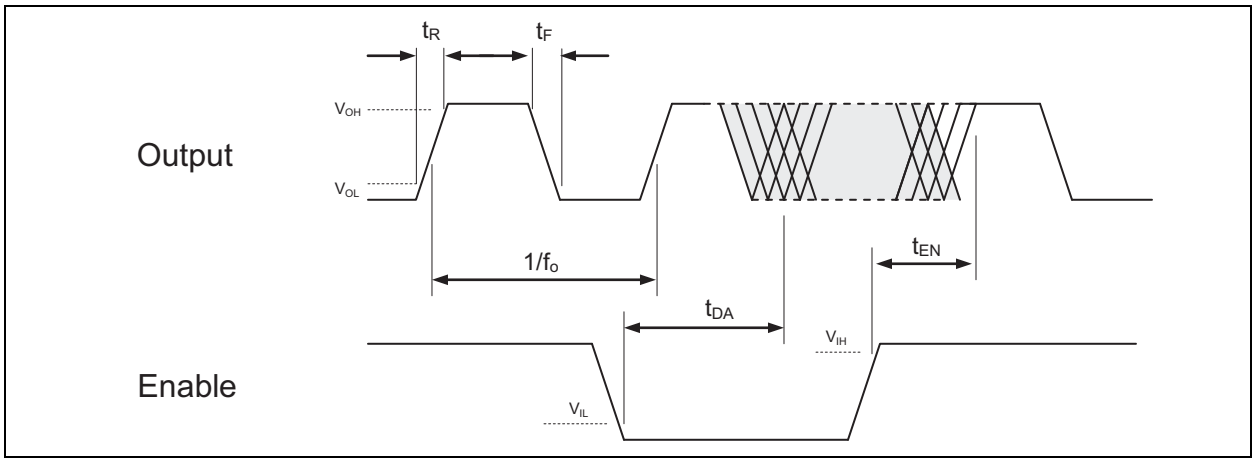

FIGURE 3-1: *OE Function and Output Waveform: LVCMOS.*

© 2016 Microchip Technology Inc.

4.0 CURRENT CONSUMPTION

Total Current = Disabled Current + ΔI_{DD} F_{OUT1} + ΔI_{DD} F_{OUT2}

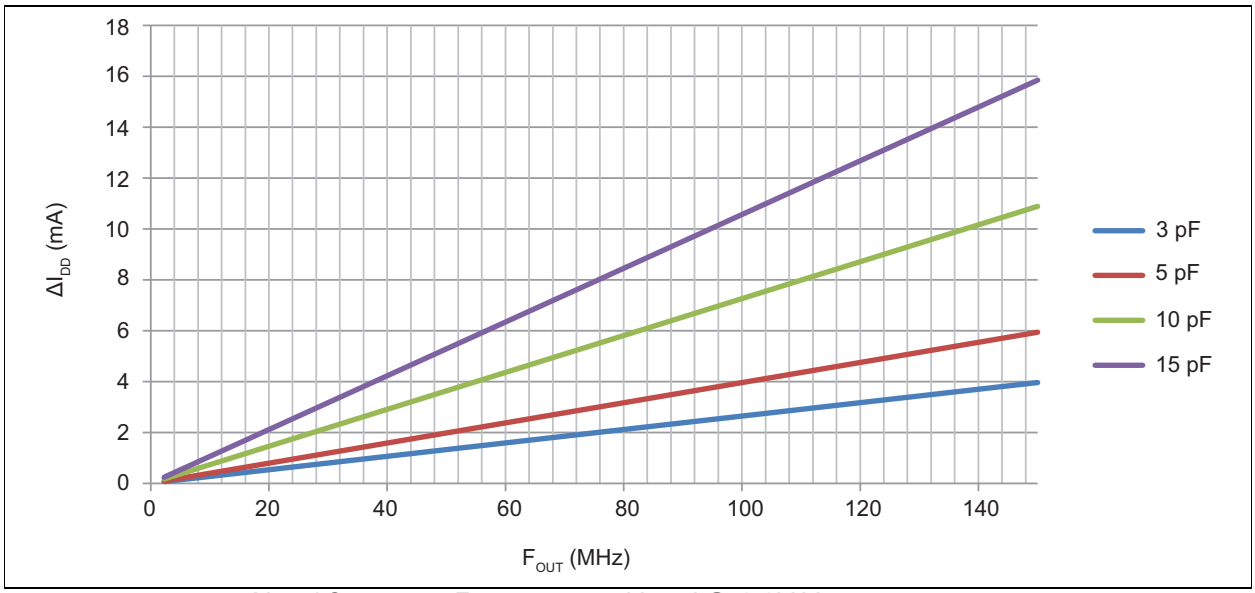

FIGURE 4-1: *ΔI_{DD} / Output vs. Frequency and Load @ 3.3V V_{DD}*

5.0 SOLDER REFLOW PROFILE

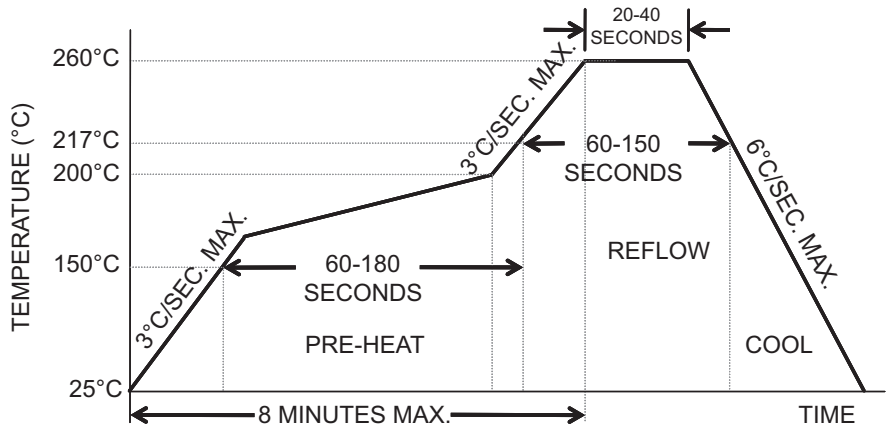

6-PIN QFN MSL 1 @ 260°C refer to JSTD-020C	
Ramp-Up Rate (200°C to Peak Temp)	3°C/sec. max.
Preheat Time 150°C to 200°C	60-180 sec.
Time Maintained above 217°C	60-150 sec.
Peak Temperature	255°C to 260°C
Time within 5°C of Actual Peak	20-40 sec.
Ramp-Down Rate	6°C/sec. max.
Time 25°C to Peak Temperature	8 minutes max.

© 2016 Microchip Technology Inc.

6.0 PACKAGE MARKING INFORMATION

6-Lead VDFN 2.5 mm x 2.0 mm Package Outline and Recommended Land Pattern

6-Lead Very Thin Dual Flatpack No-Leads (J7A) - 2.5x2.0 mm Body [VDFN]

Note: For the most current package drawings, please see the Microchip Packaging Specification located at http://www.microchip.com/packaging

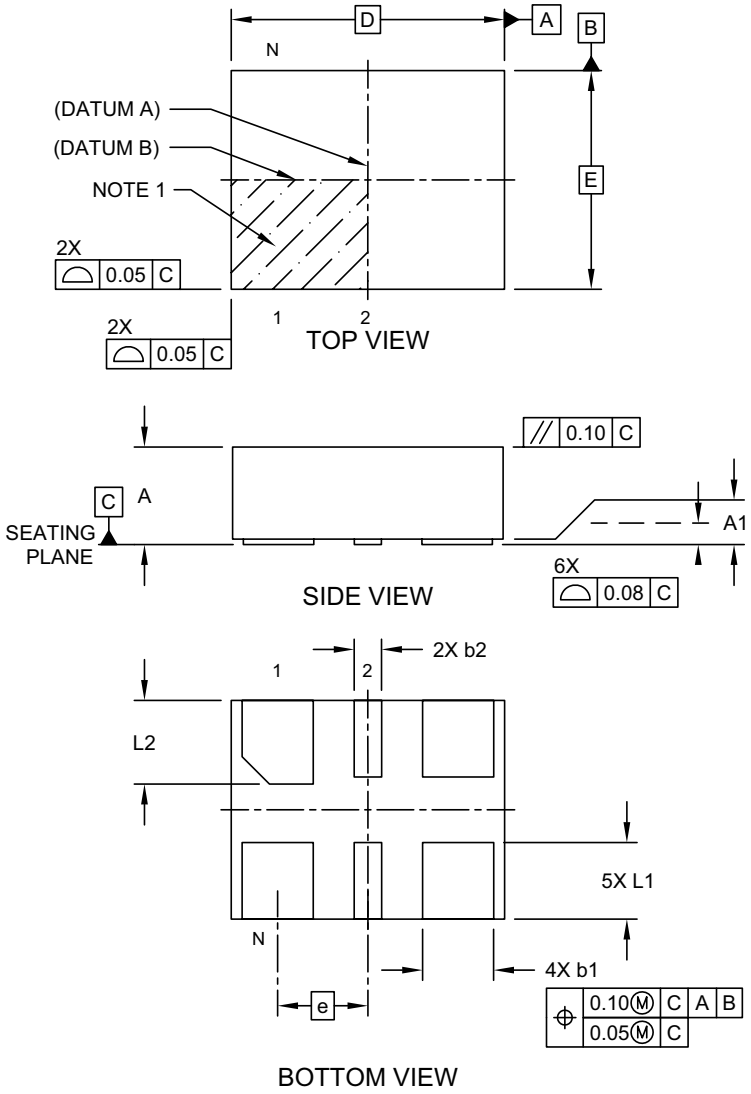

Microchip Technology Drawing C04-1005A Sheet 1 of 2

6-Lead Very Thin Dual Flatpack No-Leads (J7A) - 2.5x2.0 mm Body [VDFN]

Note: For the most current package drawings, please see the Microchip Packaging Specification located at http://www.microchip.com/packaging

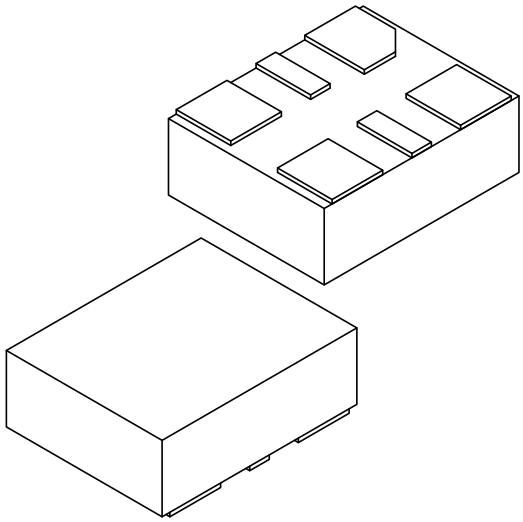

Units		MILLIMETERS		
Dimension Limits		MIN	NOM	MAX
Number of Terminals	N	6		
Pitch	e	0.825 BSC		
Overall Height	A	0.80	0.85	0.90
Standoff	A1	0.00	0.02	0.05
Overall Length	D	2.50 BSC		
Overall Width	E	2.00 BSC		
Terminal Width	b1	0.60	0.65	0.70
Terminal Width	b2	0.20	0.25	0.30
Terminal Length	L1	0.60	0.70	0.80
Terminal Length	L2	0.665	0.765	0.865

Notes:

1. Pin 1 visual index feature may vary, but must be located within the hatched area.
2. Package is saw singulated
3. Dimensioning and tolerancing per ASME Y14.5M
   BSC: Basic Dimension. Theoretically exact value shown without tolerances.
   REF: Reference Dimension, usually without tolerance, for information purposes only.

Microchip Technology Drawing C04-1005A Sheet 2 of 2

© 2016 Microchip Technology Inc.

6-Lead Very Thin Dual Flatpack No-Leads (J7A) - 2.5x2.0 mm Body [VDFN]

Note: For the most current package drawings, please see the Microchip Packaging Specification located at http://www.microchip.com/packaging

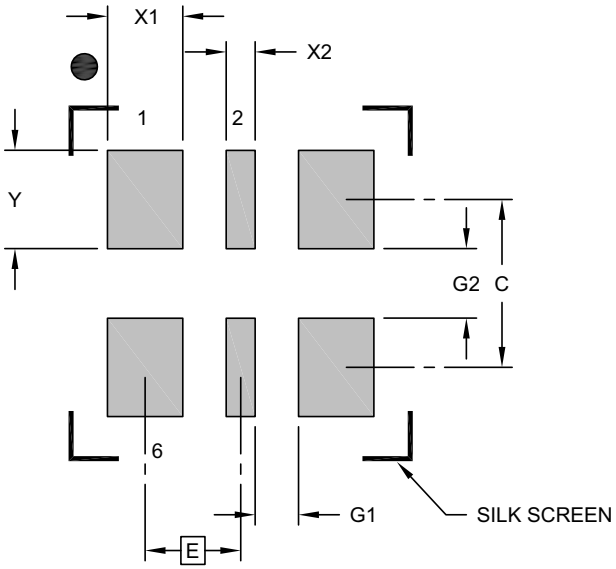

RECOMMENDED LAND PATTERN

Units		MILLIMETERS		
Dimension Limits		MIN	NOM	MAX
Contact Pitch	E	0.825 BSC		
Contact Pad Width (X4)	X1			0.65
Contact Pad Width (X2)	X2			0.25
Contact Pad Length (X6)	Y			0.85
Contact Pad Spacing	C		1.45	
Space Between Contacts (X4)	G1	0.38		
Space Between Contacts (X3)	G2	0.60		

Notes:

1. Dimensioning and tolerancing per ASME Y14.5M
   BSC: Basic Dimension. Theoretically exact value shown without tolerances.
2. For best soldering results, thermal vias, if used, should be filled or tented to avoid solder loss during reflow process

Microchip Technology Drawing C04-3005A

NOTES:

© 2016 Microchip Technology Inc.

APPENDIX A: REVISION HISTORY

Revision A (September 2016)

- Converted Micrel data sheet DSC2311 to Microchip DS20005611A.
- Minor text changes throughout.
- Package name updated to VDFN.

NOTES:

© 2016 Microchip Technology Inc.

PRODUCT IDENTIFICATION SYSTEM

To order or obtain information, e.g., on pricing or delivery, contact your local Microchip representative or sales office.

PART NO.	X	X	X	-Rxxxx	X
Device	Package	Temperature Range	Stability	Frequency	Package

Device:	DSC2311:	Crystal-less Configurable Two-Output Clock Generator	
Package:	K	=	6-LEAD 2.5 mm x 2.0 mm VDFN
Temperature Range:	E	=	–20°C to +70°C (Extended Commercial)
	I	=	–40°C to +85°C (Industrial)
	L	=	–40°C to +105°C (Extended Industrial)
	M	=	–40°C to +125°C (Automotive)
Stability:	1	=	±50 ppm
	2	=	±25 ppm
Frequency:	Rxxxx	=	Custom Frequency Code
Packing Option:	Blank	=	Tube
	T	=	Tape & Reel

Output Clock Frequencies

Output frequencies are factory-configured to individual customer and product requirements, subject to output control and divider limitations. Contact sales with your custom frequency needs.

Frequency Code	F_{OUT1} (MHz)	F_{OUT2} (MHz)
R0001	127	127
R0002	25	125

Examples:

a) DSC2311KE1-RxxxxT: Crystal-less Configurable Two-Output Clock Generator, 6-LD VDFN, Extended Commercial Temp. Range, ±50 ppm Stability, Custom Frequency (F_{OUT1} and F_{OUT2}), Tape & Reel

b) DSC2311KM2-Rxxxx: Crystal-less Configurable Two-Output Clock Generator, 6-LD VDFN, Automotive Temp. Range, ±25 ppm Stability, Custom Frequency (F_{OUT1} and F_{OUT2}), Tube

NOTES:

© 2016 Microchip Technology Inc.

Note the following details of the code protection feature on Microchip devices:

- Microchip products meet the specification contained in their particular Microchip Data Sheet.
- Microchip believes that its family of products is one of the most secure families of its kind on the market today, when used in the intended manner and under normal conditions.
- There are dishonest and possibly illegal methods used to breach the code protection feature. All of these methods, to our knowledge, require using the Microchip products in a manner outside the operating specifications contained in Microchip's Data Sheets. Most likely, the person doing so is engaged in theft of intellectual property.
- Microchip is willing to work with the customer who is concerned about the integrity of their code.
- Neither Microchip nor any other semiconductor manufacturer can guarantee the security of their code. Code protection does not mean that we are guaranteeing the product as "unbreakable."

Code protection is constantly evolving. We at Microchip are committed to continuously improving the code protection features of our products. Attempts to break Microchip's code protection feature may be a violation of the Digital Millennium Copyright Act. If such acts allow unauthorized access to your software or other copyrighted work, you may have a right to sue for relief under that Act.

Information contained in this publication regarding device applications and the like is provided only for your convenience and may be superseded by updates. It is your responsibility to ensure that your application meets with your specifications. MICROCHIP MAKES NO REPRESENTATIONS OR WARRANTIES OF ANY KIND WHETHER EXPRESS OR IMPLIED, WRITTEN OR ORAL, STATUTORY OR OTHERWISE, RELATED TO THE INFORMATION, INCLUDING BUT NOT LIMITED TO ITS CONDITION, QUALITY, PERFORMANCE, MERCHANTABILITY OR FITNESS FOR PURPOSE**.** Microchip disclaims all liability arising from this information and its use. Use of Microchip devices in life support and/or safety applications is entirely at the buyer's risk, and the buyer agrees to defend, indemnify and hold harmless Microchip from any and all damages, claims, suits, or expenses resulting from such use. No licenses are conveyed, implicitly or otherwise, under any Microchip intellectual property rights unless otherwise stated.

Microchip received ISO/TS-16949:2009 certification for its worldwide headquarters, design and wafer fabrication facilities in Chandler and Tempe, Arizona; Gresham, Oregon and design centers in California and India. The Company's quality system processes and procedures are for its PIC® MCUs and dsPIC® DSCs, KEELOQ® code hopping devices, Serial EEPROMs, microperipherals, nonvolatile memory and analog products. In addition, Microchip's quality system for the design and manufacture of development systems is ISO 9001:2000 certified.

QUALITY MANAGEMENT SYSTEM
CERTIFIED BY DNV
═ ISO/TS 16949 ═

Trademarks

The Microchip name and logo, the Microchip logo, AnyRate, dsPIC, FlashFlex, flexPWR, Heldo, JukeBlox, KeeLoq, KeeLoq logo, Kleer, LANCheck, LINK MD, MediaLB, MOST, MOST logo, MPLAB, OptoLyzer, PIC, PICSTART, PIC32 logo, RightTouch, SpyNIC, SST, SST Logo, SuperFlash and UNI/O are registered trademarks of Microchip Technology Incorporated in the U.S.A. and other countries.

ClockWorks, The Embedded Control Solutions Company, ETHERSYNCH, Hyper Speed Control, HyperLight Load, IntelliMOS, mTouch, Precision Edge, and QUIET-WIRE are registered trademarks of Microchip Technology Incorporated in the U.S.A.

Analog-for-the-Digital Age, Any Capacitor, AnyIn, AnyOut, BodyCom, chipKIT, chipKIT logo, CodeGuard, dsPICDEM, dsPICDEM.net, Dynamic Average Matching, DAM, ECAN, EtherGREEN, In-Circuit Serial Programming, ICSP, Inter-Chip Connectivity, JitterBlocker, KleerNet, KleerNet logo, MiWi, motorBench, MPASM, MPF, MPLAB Certified logo, MPLIB, MPLINK, MultiTRAK, NetDetach, Omniscient Code Generation, PICDEM, PICDEM.net, PICkit, PICtail, PureSilicon, RightTouch logo, REAL ICE, Ripple Blocker, Serial Quad I/O, SQI, SuperSwitcher, SuperSwitcher II, Total Endurance, TSHARC, USBCheck, VariSense, ViewSpan, WiperLock, Wireless DNA, and ZENA are trademarks of Microchip Technology Incorporated in the U.S.A. and other countries.

SQTP is a service mark of Microchip Technology Incorporated in the U.S.A.

Silicon Storage Technology is a registered trademark of Microchip Technology Inc. in other countries.

GestIC is a registered trademarks of Microchip Technology Germany II GmbH & Co. KG, a subsidiary of Microchip Technology Inc., in other countries.

All other trademarks mentioned herein are property of their respective companies.

© 2016, Microchip Technology Incorporated, Printed in the U.S.A., All Rights Reserved.

ISBN: 978-1-5224-0986-1

Worldwide Sales and Service

AMERICAS

Corporate Office
2355 West Chandler Blvd.
Chandler, AZ 85224-6199
Tel: 480-792-7200
Fax: 480-792-7277
Technical Support:
http://www.microchip.com/support
Web Address:
www.microchip.com

Atlanta
Duluth, GA
Tel: 678-957-9614
Fax: 678-957-1455

Austin, TX
Tel: 512-257-3370

Boston
Westborough, MA
Tel: 774-760-0087
Fax: 774-760-0088

Chicago
Itasca, IL
Tel: 630-285-0071
Fax: 630-285-0075

Cleveland
Independence, OH
Tel: 216-447-0464
Fax: 216-447-0643

Dallas
Addison, TX
Tel: 972-818-7423
Fax: 972-818-2924

Detroit
Novi, MI
Tel: 248-848-4000

Houston, TX
Tel: 281-894-5983

Indianapolis
Noblesville, IN
Tel: 317-773-8323
Fax: 317-773-5453

Los Angeles
Mission Viejo, CA
Tel: 949-462-9523
Fax: 949-462-9608

New York, NY
Tel: 631-435-6000

San Jose, CA
Tel: 408-735-9110

Canada - Toronto
Tel: 905-695-1980
Fax: 905-695-2078

ASIA/PACIFIC

Asia Pacific Office
Suites 3707-14, 37th Floor
Tower 6, The Gateway
Harbour City, Kowloon

Hong Kong
Tel: 852-2943-5100
Fax: 852-2401-3431

Australia - Sydney
Tel: 61-2-9868-6733
Fax: 61-2-9868-6755

China - Beijing
Tel: 86-10-8569-7000
Fax: 86-10-8528-2104

China - Chengdu
Tel: 86-28-8665-5511
Fax: 86-28-8665-7889

China - Chongqing
Tel: 86-23-8980-9588
Fax: 86-23-8980-9500

China - Dongguan
Tel: 86-769-8702-9880

China - Guangzhou
Tel: 86-20-8755-8029

China - Hangzhou
Tel: 86-571-8792-8115
Fax: 86-571-8792-8116

China - Hong Kong SAR
Tel: 852-2943-5100
Fax: 852-2401-3431

China - Nanjing
Tel: 86-25-8473-2460
Fax: 86-25-8473-2470

China - Qingdao
Tel: 86-532-8502-7355
Fax: 86-532-8502-7205

China - Shanghai
Tel: 86-21-5407-5533
Fax: 86-21-5407-5066

China - Shenyang
Tel: 86-24-2334-2829
Fax: 86-24-2334-2393

China - Shenzhen
Tel: 86-755-8864-2200
Fax: 86-755-8203-1760

China - Wuhan
Tel: 86-27-5980-5300
Fax: 86-27-5980-5118

China - Xian
Tel: 86-29-8833-7252
Fax: 86-29-8833-7256

ASIA/PACIFIC

China - Xiamen
Tel: 86-592-2388138
Fax: 86-592-2388130

China - Zhuhai
Tel: 86-756-3210040
Fax: 86-756-3210049

India - Bangalore
Tel: 91-80-3090-4444
Fax: 91-80-3090-4123

India - New Delhi
Tel: 91-11-4160-8631
Fax: 91-11-4160-8632

India - Pune
Tel: 91-20-3019-1500

Japan - Osaka
Tel: 81-6-6152-7160
Fax: 81-6-6152-9310

Japan - Tokyo
Tel: 81-3-6880- 3770
Fax: 81-3-6880-3771

Korea - Daegu
Tel: 82-53-744-4301
Fax: 82-53-744-4302

Korea - Seoul
Tel: 82-2-554-7200
Fax: 82-2-558-5932 or
82-2-558-5934

Malaysia - Kuala Lumpur
Tel: 60-3-6201-9857
Fax: 60-3-6201-9859

Malaysia - Penang
Tel: 60-4-227-8870
Fax: 60-4-227-4068

Philippines - Manila
Tel: 63-2-634-9065
Fax: 63-2-634-9069

Singapore
Tel: 65-6334-8870
Fax: 65-6334-8850

Taiwan - Hsin Chu
Tel: 886-3-5778-366
Fax: 886-3-5770-955

Taiwan - Kaohsiung
Tel: 886-7-213-7828

Taiwan - Taipei
Tel: 886-2-2508-8600
Fax: 886-2-2508-0102

Thailand - Bangkok
Tel: 66-2-694-1351
Fax: 66-2-694-1350

EUROPE

Austria - Wels
Tel: 43-7242-2244-39
Fax: 43-7242-2244-393

Denmark - Copenhagen
Tel: 45-4450-2828
Fax: 45-4485-2829

France - Paris
Tel: 33-1-69-53-63-20
Fax: 33-1-69-30-90-79

Germany - Dusseldorf
Tel: 49-2129-3766400

Germany - Karlsruhe
Tel: 49-721-625370

Germany - Munich
Tel: 49-89-627-144-0
Fax: 49-89-627-144-44

Italy - Milan
Tel: 39-0331-742611
Fax: 39-0331-466781

Italy - Venice
Tel: 39-049-7625286

Netherlands - Drunen
Tel: 31-416-690399
Fax: 31-416-690340

Poland - Warsaw
Tel: 48-22-3325737

Spain - Madrid
Tel: 34-91-708-08-90
Fax: 34-91-708-08-91

Sweden - Stockholm
Tel: 46-8-5090-4654

UK - Wokingham
Tel: 44-118-921-5800
Fax: 44-118-921-5820

06/23/16

© 2016 Microchip Technology Inc.