Ordering number : ENA1250A

LV8411GR

ON Semiconductor®

http://onsemi.com

Bi-CMOS LSI

For DSC, and Cell Phone Camera Modules

4-channel Single-chip Motor Driver IC

Overview

The LV8411GR is an H bridge motor driver IC and is able to control 4 modes of forward, reverse, brake, and standby. This IC housed in a miniature package is optimum for use in a stepping motor driving system for DSC or a camera module of cell phones.

Features

- Saturation drive H bridge: 4 channels
- Built-in thermal protection circuit
- Built-in low voltage malfunction prevention circuit
- Incorporates a transistor for driving photosensors

Specifications

Absolute Maximum Ratings at Ta = 25°C

Parameter	Symbol	Conditions	Ratings	Unit
Power supply voltage 1	V_M max		6.0	V
Power supply voltage 2	V_{CC} max		6.0	V
Output peak current	I_O peak	Channels 1 to 4, t ≤ 10msec, ON-duty ≤ 20%	600	mA
Output continuous current 1	I_O max1	Channels 1 to 4	400	mA
Output continuous current 2	I_O max2	PI1	30	mA
Allowable power dissipation	Pd max	Mounted on a circuit board*	1.05	W
Operating temperature	Topr		-40 to +85	°C
Storage temperature	Tstg		-55 to +150	°C

* Specified circuit board : 40mm×50mm×0.8mm : glass epoxy four-layer board

Caution 1) Absolute maximum ratings represent the value which cannot be exceeded for any length of time.

Caution 2) Even when the device is used within the range of absolute maximum ratings, as a result of continuous usage under high temperature, high current, high voltage, or drastic temperature change, the reliability of the IC may be degraded. Please contact us for the further details.

Stresses exceeding Maximum Ratings may damage the device. Maximum Ratings are stress ratings only. Functional operation above the Recommended Operating Conditions is not implied. Extended exposure to stresses above the Recommended Operating Conditions may affect device reliability.

Semiconductor Components Industries, LLC, 2013

Recommended Operating Conditions at Ta = 25°C

Parameter	Symbol	Conditions	Ratings	Unit
Power supply voltage range 1	V_M		2.5 to 5.5	V
Power supply voltage range 2	V_{CC}		2.5 to 5.5	V
Logic input voltage range	V_{IN}		0 to V_{CC}+0.3	V
Input frequency	f_{IN}	IN1 to 8, INA	to 100	kHz

Electrical Characteristics at Ta = 25°C, V_M = 5V, V_{CC} = 3.3V, unless otherwise specified.

Parameter	Symbol	Conditions	Ratings			Unit
			min	typ	max	
Standby mode current drain	Istn	IN1 to 8 = "L"			1.0	μA
VM current drain	IM	IN1 = "H", IM1 + IM2, with no load	50	100	200	μA
V_{CC} current drain	I_{CC}	IN1 = "H"	0.3	0.6	1.2	mA
V_{CC} low-voltage cutoff voltage	$VthV_{CC}$		2.0	2.25	2.5	V
Low-voltage hysteresis voltage	VthHIS		100	150	200	mV
Thermal shutdown temperature	TSD	Design guarantee value *	160	180	200	°C
Thermal hysteresis width	ΔTSD	Design guarantee value *	10	30	50	°C
OUT1 to 8						
Logic pin internal pull-down resistance	Rin	IN1 to 8	50	100	200	kΩ
Logic pin input current	IinL	V_{IN} = 0V, IN1 to 8			1.0	μA
	IinH	V_{IN} = 3.3V, IN1 to 8	16.5	33	60	μA
Logic input high-level voltage	Vinh	IN1 to 8	2.5			V
Logic input low-level voltage	Vinl	IN1 to 8			1.0	V
Output on-resistance	Ronu	I_O = 400mA, upper ON resistance		0.75	0.9	Ω
	Rond	I_O = 400mA, lower ON resistance		0.45	0.6	Ω
Output leakage current	$I_O$leak				1.0	μA
Diode forward voltage	VD	ID = -400mA	0.7	0.9	1.2	V
PI1						
Logic pin internal pull-down resistance	Rin	INA	50	100	200	kΩ
Logic pin input current	IinL	V_{IN} = 0V, INA			1.0	μA
	IinH	V_{IN} = 3.3V, INA	16.5	33	60	μA
Logic input high-level voltage	Vinh	INA	2.5			V
Logic input low-level voltage	Vinl	INA			1.0	V
Output on-resistance	Ron	I_O = 10mA		3.0	6.0	Ω
Output leakage current	$I_O$leak				1.0	μA

Package Dimensions

unit : mm (typ)
3366

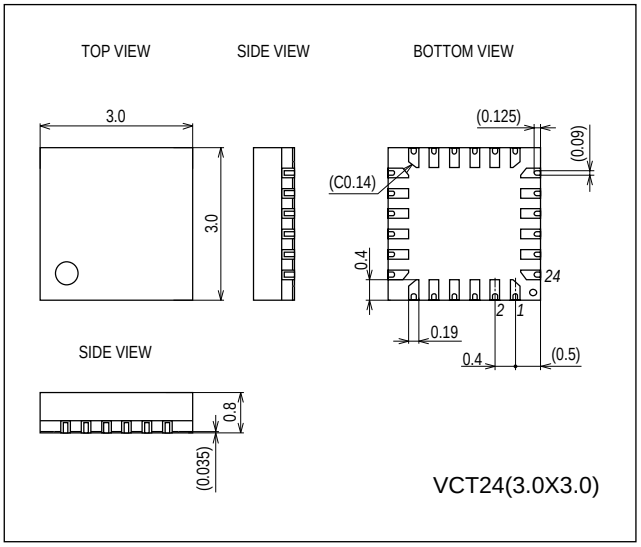

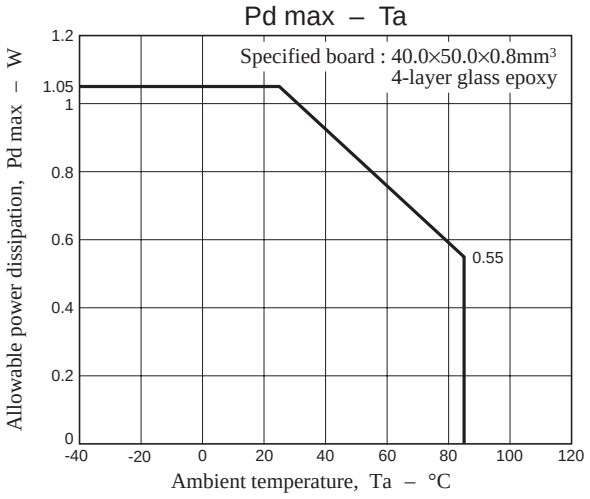

Pin Assignment

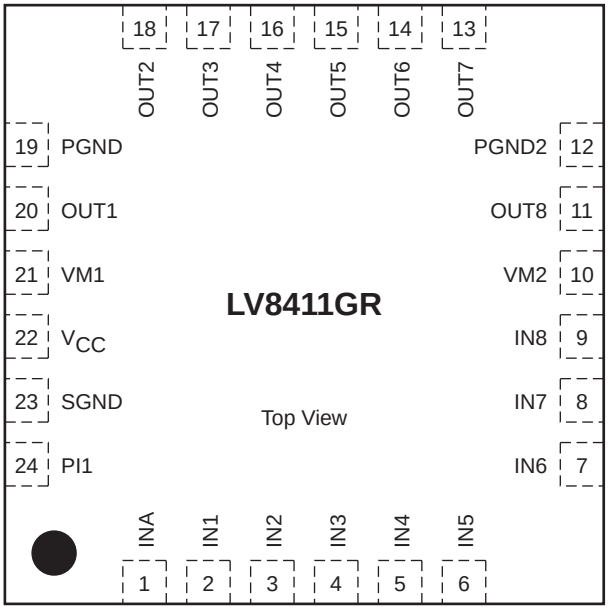

Block Diagram

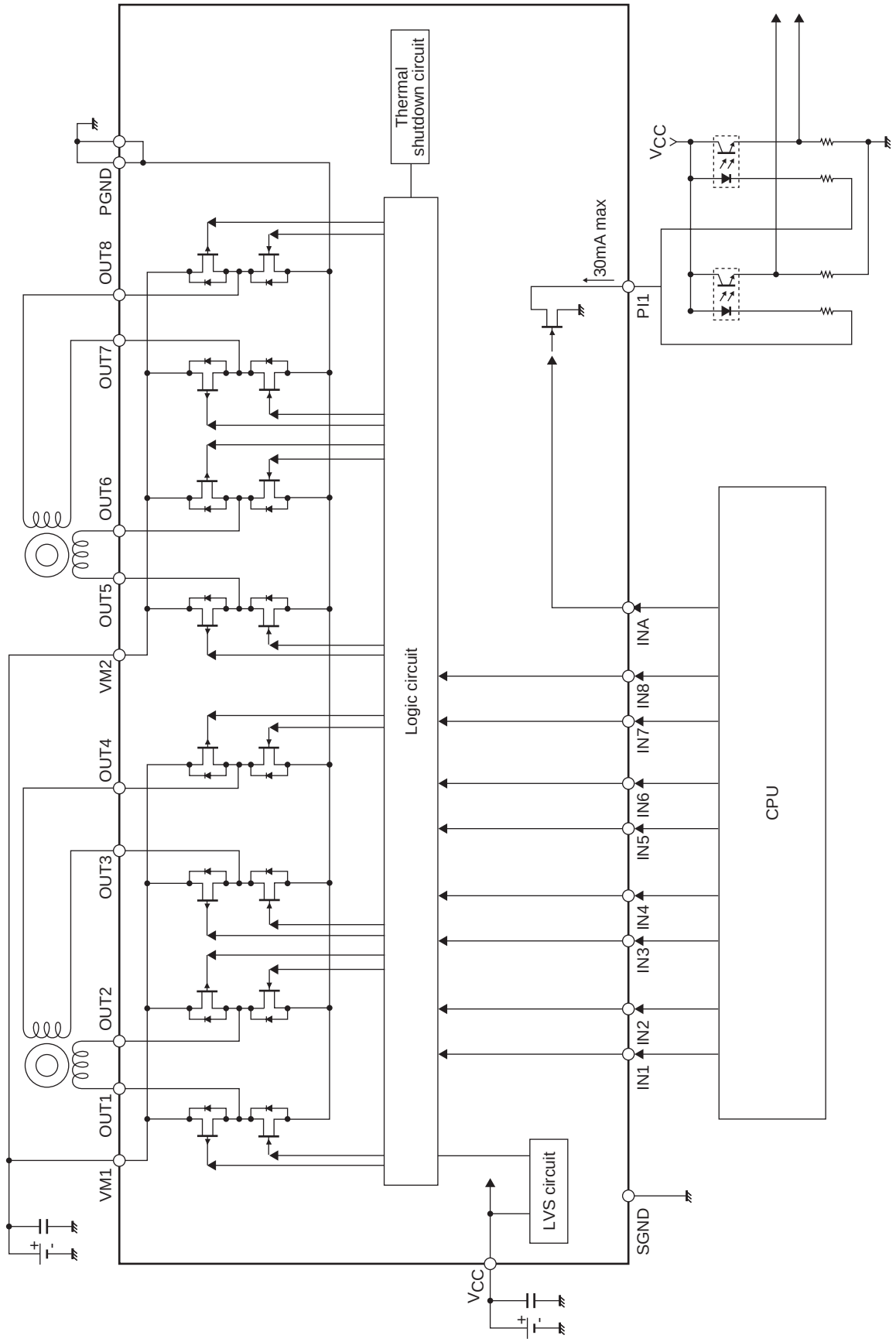

Pin Functions

Pin No.	Pin name	Pin Function	Equivalent Circuit
1	INA	Control signal input pin (Photo sensor driving transistor)	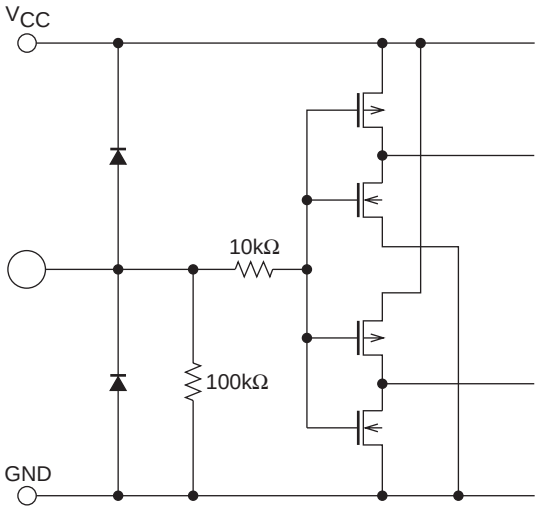
2	IN1	Control signal input pin	
3	IN2	Control signal input pin	
4	IN3	Control signal input pin	
5	IN4	Control signal input pin	
6	IN5	Control signal input pin	
7	IN6	Control signal input pin	
8	IN7	Control signal input pin	
9	IN8	Control signal input pin	
11	OUT8	Outpin	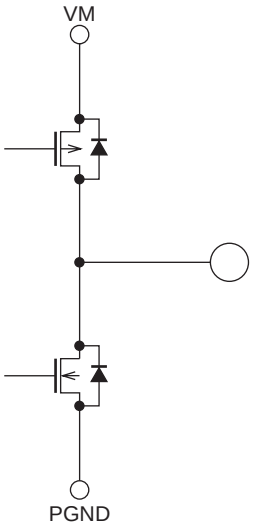
13	OUT7	Outpin	
14	OUT6	Outpin	
15	OUT5	Outpin	
16	OUT4	Outpin	
17	OUT3	Outpin	
18	OUT2	Outpin	
20	OUT1	Outpin	
24	PI1	Photo sensor driving transistor output pin	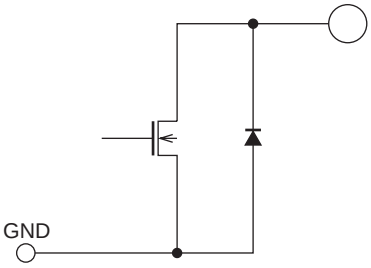
22	V_{CC}	Logic system power supply connection pin	
10	VM2	Motor power supply connection pin	
21	VM1	Motor power supply connection pin	
23	SGND	Signal ground	
12	PGND2	Power ground	
19	PGND1	Power ground	

Logic input specifications

- Common channels 1 to 4
  ch1 : IN1 to IN2, OUT1 to OUT2
  ch2 : IN3 to IN4, OUT3 to OUT4
  ch3 : IN5 to IN6, OUT5 to OUT6
  ch4 : IN7 to IN8, OUT7 to OUT8

Input		Output		Operation mode
IN1	IN2	OUT1	OUT2	
L	L	OFF	OFF	Standby
H	L	H	L	CW (forward)
L	H	L	H	CCW (reverse)
H	H	L	L	Brake

- Current limit control timing chart

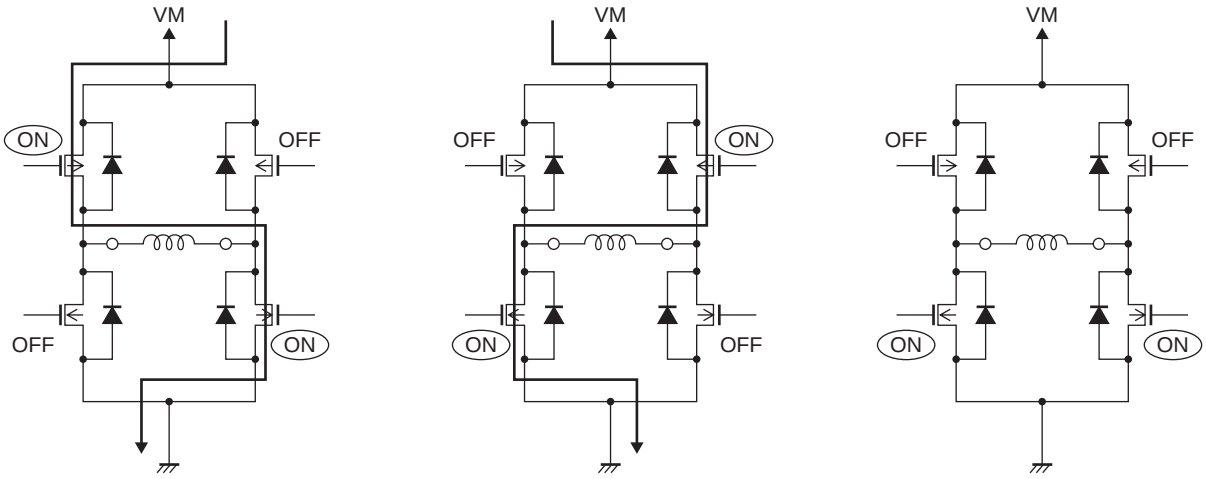

(Forward) (Reverse) (Brake)

- Photo sensor driving transistor
  When thermal shutdown and V_{CC} low-voltage cut circuits are activated, OUT1 through OUT8 are turned OFF under control of the internal circuit. But the output (PI1) of photo sensor driving transistor continues operation.

Input	Photo sensor driving
INA	PI1
L	OFF
H	ON

ON Semiconductor and the ON logo are registered trademarks of Semiconductor Components Industries, LLC (SCILLC). SCILLC owns the rights to a number of patents, trademarks, copyrights, trade secrets, and other intellectual property. A listing of SCILLC's product/patent coverage may be accessed at www.onsemi.com/site/pdf/Patent-Marking.pdf. SCILLC reserves the right to make changes without further notice to any products herein. SCILLC makes no warranty, representation or guarantee regarding the suitability of its products for any particular purpose, nor does SCILLC assume any liability arising out of the application or use of any product or circuit, and specifically disclaims any and all liability, including without limitation special, consequential or incidental damages. "Typical" parameters which may be provided in SCILLC data sheets and/or specifications can and do vary in different applications and actual performance may vary over time. All operating parameters, including "Typicals" must be validated for each customer application by customer's technical experts. SCILLC does not convey any license under its patent rights nor the rights of others. SCILLC products are not designed, intended, or authorized for use as components in systems intended for surgical implant into the body, or other applications intended to support or sustain life, or for any other application in which the failure of the SCILLC product could create a situation where personal injury or death may occur. Should Buyer purchase or use SCILLC products for any such unintended or unauthorized application, Buyer shall indemnify and hold SCILLC and its officers, employees, subsidiaries, affiliates, and distributors harmless against all claims, costs, damages, and expenses, and reasonable attorney fees arising out of, directly or indirectly, any claim of personal injury or death associated with such unintended or unauthorized use, even if such claim alleges that SCILLC was negligent regarding the design or manufacture of the part. SCILLC is an Equal Opportunity/Affirmative Action Employer. This literature is subject to all applicable copyright laws and is not for resale in any manner.