SM806XXX

Ultra-Low Jitter Clock Generator

Features

- Generates up to 6 Differential or Single-Ended Outputs: Frequencies up to 875 MHz
- <65 fs Phase Jitter at 156.25 MHz (1.875 MHz to 20 MHz)
- 78 fs Phase Jitter at 156.25 MHz (12 kHz to 20 MHz)
- On-Chip Power Supply Regulation for Excellent Power Supply Noise Immunity
- High Performance PLL generator to Generate Multiple Frequencies
- Independently Programmable Output Logic and Frequency:
  - Output Logic: LVPECL, LVDS, HCSL, LVCMOS
- Selectable Input:
  - Crystal: 50 MHz to 156.25 MHz (31.25 MHz to <50 MHz with Increased Phase Noise)
  - Reference Input: 50 MHz to 875 MHz
- SPI Programmable (See Flex SPI Documentation)
- No External Crystal Oscillator Capacitors Required
- 2.5V or 3.3V Operating Power Supply
- Separate Output Power Supplies:
  - Each Bank can be at a Different Power Supply Voltage Level (2 Banks of 3 Outputs Each)
- Industrial Temperature Range: –40°C to +85°C
- Green, RoHS, and PFOS Compliant VQFN Packages:
  - 48-Pin 7 mm x 7 mm (6 Differential or Single-Ended Outputs)
  - 24-Pin 4 mm x 4 mm (2 Differential or Single-Ended Outputs)

Applications

- 1/10/40/100/400 Gigabit Ethernet (GbE)
- SONET/SDH
- PCI Express Gen 1/2/3/4/5/6
- CPRI/OBSAI – Wireless Base Station
- Fibre Channel
- HDMI/HDTV-4K
- DIMM (DDR2-3-4/AMB)

General Description

The SM806xxx is a PLL clock generator that achieves ultra-low phase jitter (78 fs_{RMS}). With six total outputs and dividers on each output, this device can generate six different frequencies up to 875 MHz, from a low-cost quartz crystal or a reference clock input.

Each of the six outputs can be independently programmed to LVPECL, LVDS, HCSL, or LVCMOS logic. For LVCMOS, only the true side of the channel is used.

The SM806xxx is packaged in a 48-pin VQFN with up to six outputs or a 24-pin VQFN with two outputs.

Functional Block Diagram

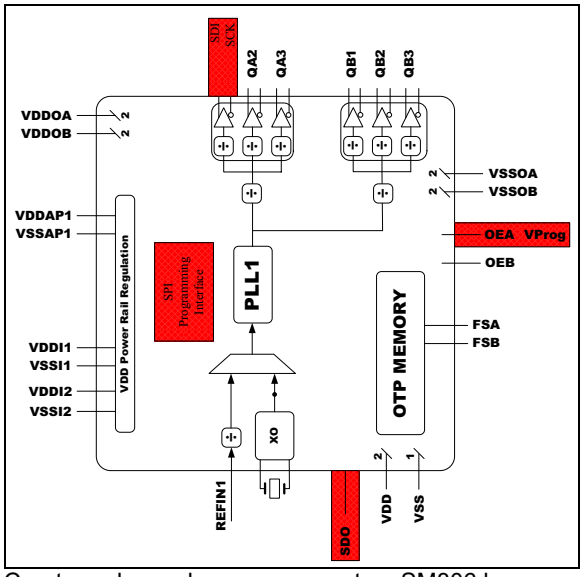

Create and sample your own custom SM806 here:

https://clockworks.microchip.com/microchip/design/inputSM806

Package Types

SM806xxx (6 Outputs)
Option 1: 48-Pin 7 mm x 7 mm VQFN
(Top View)

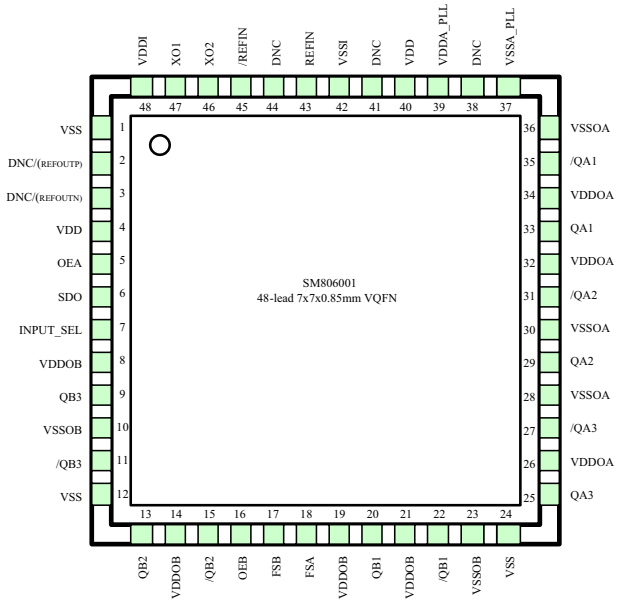

Full Feature Package

SM806xxx (2 Outputs)
Option 2: 24-Pin 4 mm x 4 mm VQFN
(Top View)

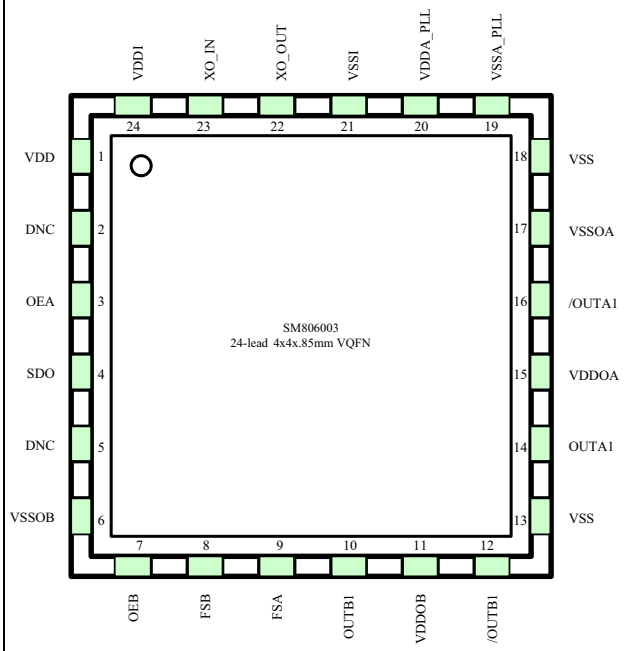

Crystal Reference

SM806xxx (2 Outputs)
Option 3: 24-Pin 4 mm x 4 mm VQFN
(Top View)

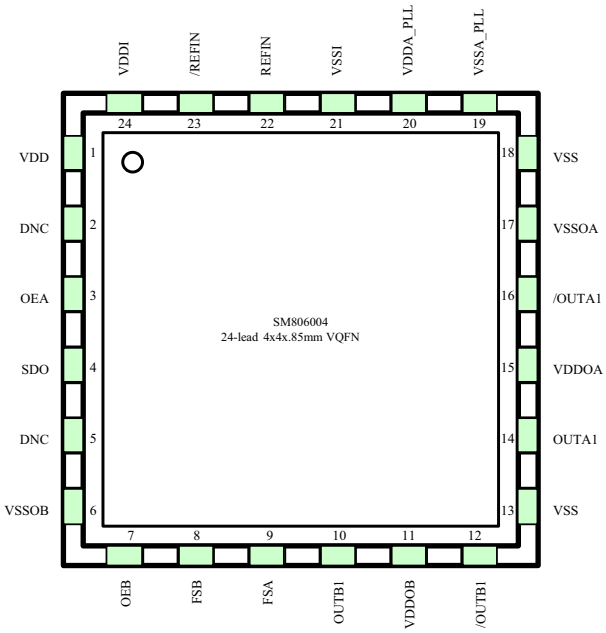

Differential Signal Reference

© 2019 - 2023 Microchip Technology Inc. and its subsidiaries

1.0 ELECTRICAL CHARACTERISTICS

Absolute Maximum Ratings †

Supply Voltage (V_{DD}, V_{DDA}, V_{DDI}, V_{DDO}) ..... +4.6V
Input Voltage (V_{IN}) ..... –0.5V to +4.6V
ESD, Machine Model 200V
ESD, Human Body Model ..... 2 kV

Operating Ratings ††

Supply Voltage (V_{DD}, V_{DDO}) ..... +2.375V to +3.465V

† Notice: Exceeding the absolute maximum ratings may damage the device.

†† Notice: The device is not guaranteed to function outside its operating ratings.

ELECTRICAL CHARACTERISTICS

Electrical Characteristics: Unless otherwise indicated, typical values are valid for T_A = +25°C. The min. and max. values are valid for –40°C ≤ T_A ≤ +85°C.

Parameter	Symbol	Min.	Typ.	Max.	Units	Conditions
Supply Voltage	V_{DD}, V_{DDO}	2.375	2.5	2.625	V	2.5V Operation
		3.135	3.3	3.465		3.3V Operation
Analog & I/O Supply	V_{DDI}	2.375	—	3.465	V	—
PLL Core	V_{DDA}	2.375	—	3.465	V	—
PLL Core Current Consumption	I_{DDA}	—	—	60	mA	—
Analog & I/O Current	I_{DDI}	—	—	20	mA	—
Output Stage Current Consumption	I_{DDO}	—	—	70	mA	Per output bank, unloaded
SPI and Miscellaneous Logic	I_{DD}	—	—	8	mA	—

LVPECL DC ELECTRICAL CHARACTERISTICS

Electrical Characteristics: V_{DDCORE} = V_{DD} = V_{DD0} = 3.3V ±5% or 2.5V ±5%, T_A = –40°C to +85°C, unless otherwise noted. R_L = 50Ω to V_{DDO} – 2V.

Parameter	Symbol	Min.	Typ.	Max.	Units	Conditions
Output High Voltage	V_{OH}	V_{DDO} – 1.35	V_{DDO} – 1.01	V_{DDO} – 0.8	V	50Ω to V_{DDO} – 2V
Output Low Voltage	V_{OL}	V_{DDO} – 2	V_{DDO} – 1.78	V_{DDO} – 1.6	V	50Ω to V_{DDO} – 2V
Peak-to-Peak Output Voltage	V_{SWING}	0.65	0.77	0.95	V	Figure 5

© 2019 - 2023 Microchip Technology Inc. and its subsidiaries

LVDS DC ELECTRICAL CHARACTERISTICS

Electrical Characteristics: V_{DDCORE} = V_{DD} = V_{DD0} = 3.3V ±5% or 2.5V ±5%, T_A = –40°C to +85°C, unless otherwise noted. R_L = 100Ω between Q and /Q.

Parameter	Symbol	Min.	Typ.	Max.	Units	Conditions
Differential Output Voltage	V_{OD}	245	350	454	mV	Figure 6-5
Common Mode Voltage	V_{CM}	1.125	1.2	1.375	V	—
Output High Voltage	V_{OH}	1.248	1.375	1.602	V	—
Output Low Voltage	V_{OL}	0.898	1.025	1.252	V	—

HCSL DC ELECTRICAL CHARACTERISTICS

Electrical Characteristics: V_{DDCORE} = V_{DD} = V_{DD0} = 3.3V ±5% or 2.5V ±5%, T_A = –40°C to +85°C, unless otherwise noted. R_L = 50Ω to V_{SS}.

Parameter	Symbol	Min.	Typ.	Max.	Units	Conditions
Output High Voltage	V_{OH}	660	700	850	mV	—
Output Low Voltage	V_{OL}	–150	0	27	mV	—
Crossing Point Voltage	V_{CROSS}	—	350	—	mV	—

LVCMOS DC ELECTRICAL CHARACTERISTICS

Electrical Characteristics: V_{DDCORE} = V_{DD} = V_{DD0} = 3.3V ±5% or 2.5V ±5%, T_A = –40°C to +85°C, unless otherwise noted. R_L = 50Ω to V_{DDO}/2.

Parameter	Symbol	Min.	Typ.	Max.	Units	Conditions
Output High Voltage	V_{OH}	V_{DD} – 0.8	—	—	V	Highest Drive (Default)
Output Low Voltage	V_{OL}	—	—	0.5	V	—
Input High Voltage	V_{IH}	V_{DD} – 0.7	—	V_{DD} + 0.3	V	—
Input Low Voltage	V_{IL}	V_{SS} – 0.3	—	0.3 × V_{DD}	V	—
Input High Current	I_{IH}	—	—	5	µA	V_{DD} = V_{IN} = 3.465V
Input Low Current	I_{IL}	–150	—	—	µA	V_{DD} = 3.465V, V_{IN} = 0V

REF_IN DC ELECTRICAL CHARACTERISTICS

Electrical Characteristics: V_{DD} = 3.3V ±5% or 2.5V ±5%; T_A = –40°C to +85°C.

Parameter	Symbol	Min.	Typ.	Max.	Units	Conditions
Input Common Mode Voltage	V_{CMR}	0.3	—	V_{DD} – 0.3	V	Note 1
Input Voltage Swing	V_{SWING}	0.2	—	—	V_{PP}	Note 1

Note 1: See the Input Selection section.

© 2019 - 2023 Microchip Technology Inc. and its subsidiaries

CRYSTAL CHARACTERISTICS

Parameter	Min.	Typ.	Max.	Units	Conditions
Mode of Oscillation	Fundamental, parallel resonant			—	—
Frequency	50	—	200	MHz	Note 1
Equivalent Series Resistance (ESR)	—	—	60	Ω	—
Load Capacitance, C_L	—	8.0	±0.5	pF	8.0 pF parallel load, typical
Shunt Capacitance, C0	—	0.3	1.5	pF	—
Correlation/Drive Level	—	10	200	µW	EIA-512

Note 1: Frequencies below 50 MHz can be used, but will have increased phase noise.

AC ELECTRICAL CHARACTERISTICS

Electrical Characteristics: V_{DD} = $V_{DDO1/2}$ = 3.3V ±5% or 2.5V ±5%; V_{DD} = 3.3V ±5%, $V_{DDO1/2}$ = 3.3V ±5% or 2.5V ±5%; T_A = –40°C to +85°C.

Parameter	Symbol	Min.	Typ.	Max.	Units	Conditions
Input Frequency	f_{IN}	50	—	200	MHz	XO
		12.5	—	875	MHz	Reference Input
Output Frequency	f_{OUT}	12.5	—	875	MHz	LVPECL, LVDS, HCSL
		12.5	—	300	MHz	LVCMOS
Output Rise/Fall Time (Note 1)	t_r/t_f	85	135	350	ps	LVPECL output
		85	140	300		LVDS output
		175	200	400		HCSL output
		100	200	400		LVCMOS output (default drive)
Output Duty Cycle	ODC	45	50	55	%	All output frequencies
		48	50	52		<450 MHz output frequencies
Input to Output Propagation Delay	t_{PD}	–100	—	100	ps	ZDB mode
		—	4	—	ns	Generator/Bypass mode
Output-to-Output Skew (Note 2)	t_{SKEW}	—	—	50	ps	Same output bank, Note 3
PLL Lock Time	t_{LOCK}	—	5	20	ms	—
RMS Phase Jitter (Note 4, Note 5)	$t_{JIT(Ø)}$	—	78	100	fs	156.250 MHz, Integration range (12 kHz - 20 MHz)
		—	65	—		156.250 MHz, Integration range (1.875 MHz - 20 MHz)

Note 1: See Figure 6-5.

2: Output-to-output skew is defined as skew between outputs at the same supply voltage and with equal load conditions. It is measured at the output differential crossing points.

3: Output-to-output skew is only defined for outputs in the same PLL bank [A:B, C:D] with the same output logic type setting.

4: All phase noise measurements were taken with an Agilent 5052B phase noise system.

5: Measured using a 52.08333 MHz crystal as the input reference source. If using an external reference input, use a low phase noise source. With an external reference, the phase noise will follow the input source phase noise up to about 1 MHz.

© 2019 - 2023 Microchip Technology Inc. and its subsidiaries

TEMPERATURE SPECIFICATIONS

Parameters	Sym.	Min.	Typ.	Max.	Units	Conditions
Temperature Ranges						
Ambient Temperature Range	T_A	–40	—	+85	°C	—
Lead Temperature	—	—	—	+260	°C	Soldering, 20s
Case Temperature	—	—	—	+115	°C	—
Storage Temperature Range	T_S	–65	—	+150	°C	—
Package Thermal Resistances (Note 1)						
Junction Thermal Resistance, 7 x 7 VQFN-48Ld	θ_{JA}	—	23.4	—	°C/W	—
Junction Thermal Resistance, 4 x 4 VQFN-24Ld	θ_{JA}	—	25	—	°C/W	Still-Air

Note 1: Package thermal resistance assumes the exposed pad is soldered (or equivalent) to the device's most negative potential on the PCB.

© 2019 - 2023 Microchip Technology Inc. and its subsidiaries

2.0 PIN DESCRIPTIONS

The descriptions of the pins are listed in Table 2-1.

TABLE 2-1: PIN FUNCTION TABLE

Pin Numbers by Package Option			Pin Name	Pin Type	Pin Level	Pin Function
#1 48-pin	#2 24-pin	#3 24-pin				
33	14	14	QA1	O, (DIF/SE)	LVPECL LVDS HCSL LVCMOS (Q only)	Differential/SE Clock Output (LVCMOS)
35	16	16	/QA1			
29	—	—	QA2			
31	—	—	/QA2			
25	—	—	QA3			
27	—	—	/QA3			
20	10	10	QB1			
22	12	12	/QB1			
13	—	—	QB2			
15	—	—	/QB2			
9	—	—	QB3			
11	—	—	/QB3			
18	9	9	FSA	I, (SE)	LVCMOS	Frequency Select, on-chip 75 kΩ pull-up 1 = Primary Selection 0 = Secondary Selection
17	8	8	FSB			
4	1	1	V_{DD}	PWR	—	Power Supply
40	—	—				
26	15	15	V_{DDOA}	PWR	—	Power Supply for Outputs QA
32	—	—				
34	—	—				
8	11	11	V_{DDOB}	PWR	—	Power Supply for Outputs QB
14	—	—				
19	—	—				
21	—	—				
39	20	20	V_{DDAPLL}	PWR	—	Analog Power Supply for PLL
37	19	19	V_{SSAPLL}	PWR	—	Analog Power Supply for PLL
48	24	24	V_{DDI}	PWR	—	Power Supply for Reference Input Circuits and Crystal Oscillator
42	21	21	V_{SSI}	PWR	—	Ground for Reference Input Circuits and Crystal Oscillator
1	13	13	GND-V_{SS} (Exposed Pad)	PWR	—	Power Supply Ground. The exposed pad must be connected to the VSS ground plane.
12	18	18				
24	—	—				
ePad	ePad	ePad				
28	17	17	V_{SSOA}	PWR	—	Ground Return Path for the Bank A Output Drivers
30	—	—				
36	—	—				
10	6	6	V_{SSOB}	PWR	—	Ground Return Path for the Bank B Output Drivers
23	—	—				

© 2019 - 2023 Microchip Technology Inc. and its subsidiaries

TABLE 2-1: PIN FUNCTION TABLE (CONTINUED)

Pin Numbers by Package Option			Pin Name	Pin Type	Pin Level	Pin Function
#1 48-pin	#2 24-pin	#3 24-pin				
5	3	3	OEA1/2/3	I, (SE)	LVCMOS	Output Enable, Outputs QA1/2/3 disable to tri-state. 0 = Disabled 1 = Enabled, on-chip 75 kΩ pull-up
16	7	7	OEB1/2/3	I, (SE)	LVCMOS	Output Enable, Outputs QB1/2/3 disable to tri-state. 0 = Disabled 1 = Enabled, on-chip 75 kΩ pull-up
43	—	22	REFIN1	I, (Diff/SE)	LVPECL LVDS HCSL LVCMOS	Reference Clock Input 1
45	—	23	/REFIN1			
47	23	—	XTAL_IN	I, (SE)	Crystal	Crystal Reference Input, no external load caps needed
46	22	—	XTAL_OUT	O, (SE)	Crystal	Crystal Reference Output, no external load caps needed
38	2	2	NC	—	—	No Connect No internal connections to the ASIC are made
41	5	5				
44	—	—				
6	4	4	SDO	I/O, (SE)	LVCMOS	SPI bus pins for programming. Connect per standard data sheet for normal operation. See: Phoenix-Lite Programming Guide
33	14	14	SDI			
35	16	16	SCK			
5	3	3	V_{PROG}			

Note 1: Multi-function pins.

TABLE 2-2: TRUTH TABLE

OEA	OEB	Output
0	1	3 QA outputs tri-state
1	0	3 QB outputs tri-state

TABLE 2-3: FREQUENCY SELECT PIN

FSA	FSB	Output Frequency
0	1	QA outputs: Secondary output dividers QB outputs: Primary output dividers
1	0	QA outputs: Primary output dividers QB outputs: Secondary output dividers
1	1	QA outputs: Primary output dividers QB outputs: Primary output dividers
0	0	QA outputs: Secondary output dividers QB outputs: Secondary output dividers

© 2019 - 2023 Microchip Technology Inc. and its subsidiaries

3.0 KEY PROGRAMMABLE PARAMETERS

3.1 Frequency Settings for One PLL and One Output Bank

The REF input frequency can be from a crystal or from a reference clock input. If a crystal is used, the REF input frequency range is 50 MHz to 200 MHz.

The VCO in the PLL has a range of 2875 MHz to 3540 MHz.

Counters M and P0 have a range of 4 to 259.

Counters P1, P2, and P3 have a range of 1 to 16.

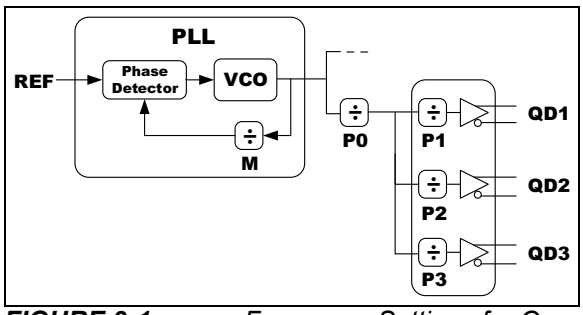

FIGURE 3-1: *Frequency Settings for One PLL and One Output Bank.*

EQUATION 3-1:

$$F_{VCO} = REF \times M$$

EQUATION 3-2:

$$QD1 = F_{VCO} \div (P0 \times P1)$$

EQUATION 3-3:

$$QD2 = F_{VCO} \div (P0 \times P2)$$

EQUATION 3-4:

$$QD3 = F_{VCO} \div (P0 \times P3)$$

3.2 Output Logic Programming

Available output logic types are LVPECL, LVDS, HCSL, and LVCMOS. Each output can be programmed individually to one of the four logic types.

All logic types are differential, except LVCMOS. For LVCMOS, only the true channel of the output pair is enabled and the complementary channel is disabled. With LVCMOS there is also an output drive setting. There is one setting for all LVCMOS outputs, so all LVCMOS outputs will have the same drive strength.

Unused outputs are disabled to high impedance.

3.3 Input Selection

The reference input for the PLLs can be programmed to be either a crystal or a reference clock.

The crystal oscillator circuit has capacitors on the IC, so external capacitors are not required.

There are two reference clock inputs, one for each PLL. Make sure they are connected to the same reference input source. The reference inputs can be differential or single-ended and require only a small amplitude. See Figure 3-2.

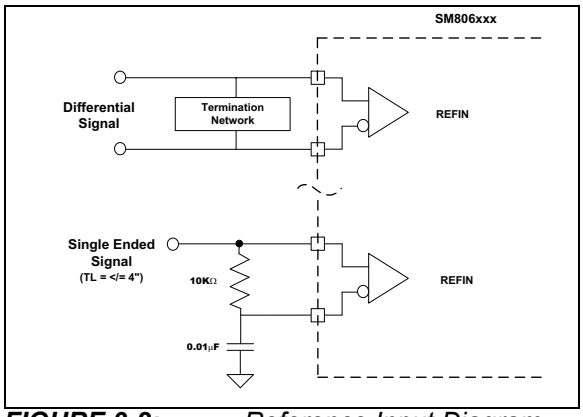

FIGURE 3-2: *Reference Input Diagram.*

The single-ended signal input can be LVCMOS, but smaller amplitudes like a >800 mV_{PP} clipped sine wave from a TCXO will also work.

3.4 Frequency Select Programming

Each of the four output banks has a frequency select pin. For each bank, two P0, P1, P2, and P3 counter values can be programmed, a primary and a secondary value. The frequency select pin toggles between the two values assigned to each counter, changing the output frequencies.

© 2019 - 2023 Microchip Technology Inc. and its subsidiaries

4.0 APPLICATION INFORMATION

4.1 Input Reference

When operating with a crystal input reference, do not apply a switching signal to REF_IN.

4.2 Crystal Layout

Keep the layers under the crystal as open as possible and do not place switching signals or noisy supplies under the crystal. Crystal load capacitance is built inside the die, so no external capacitance is needed. See the ANTC207 application note for further details.

4.3 Output Traces

Design the traces for the output signals according to the output logic requirements. If LVCMOS is unterminated, add a 30Ω resistor in series with the output, as close as possible to the output pin and start a 50Ω trace on the other side of the resistor.

For differential traces you can either use a differential design or two separate 50Ω traces. For EMI reasons, it is better to use a balanced differential transmission line design.

LVDS can be AC-coupled or DC-coupled to its termination.

© 2019 - 2023 Microchip Technology Inc. and its subsidiaries

5.0 POWER SUPPLY FILTERING RECOMMENDATIONS

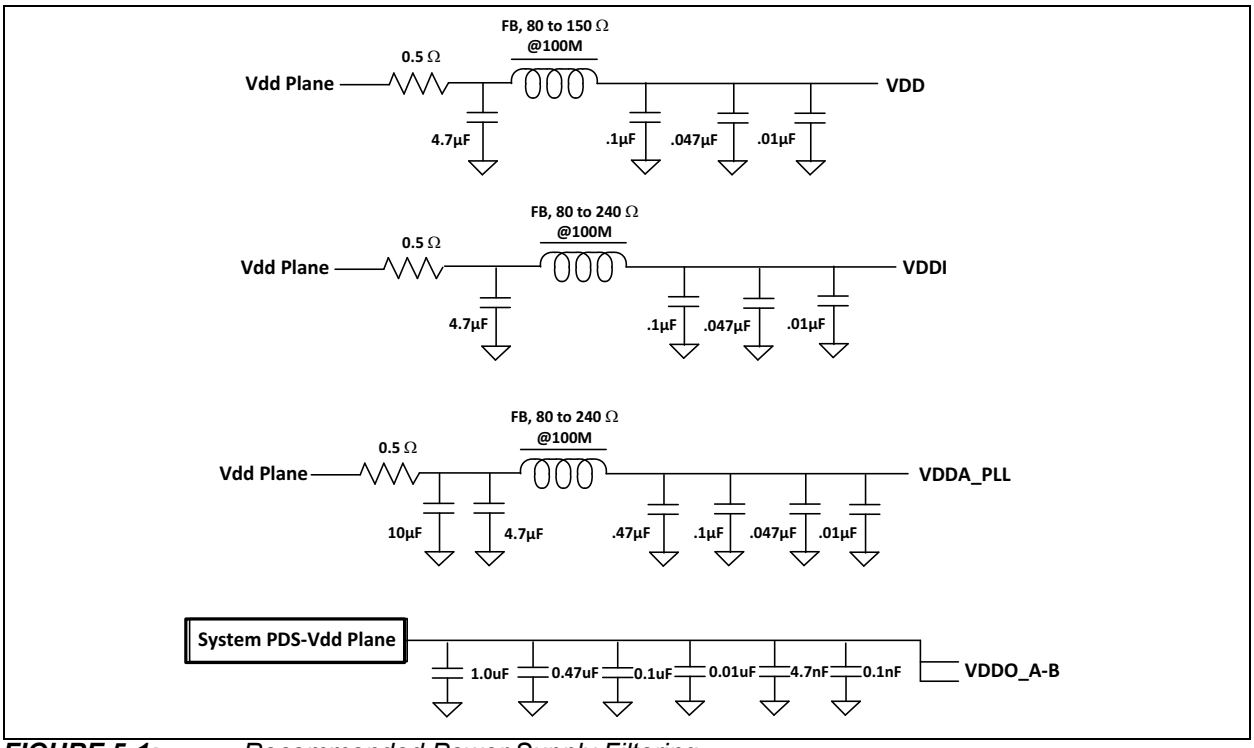

FIGURE 5-1: *Recommended Power Supply Filtering.*

- Use the power supply filtering shown in Figure 5-1 for V_{DDAP1}, V_{DDAP2}, V_{DDI1}, and V_{DDI2}.
- Connect the V_{DDO} and V_{DD} pins directly to the V_{DD} power plane.
- Connect all V_{SS} pins directly to the ground power plane.
- Recommended ferrite bead properties are 80Ω to 240Ω impedance and >250 mA saturation current.
- To improve power supply filtering beyond what a ferrite bead can provide, the Ripple Blocker™ provides a solution. MIC94300 or MIC94310 are recommended parts. The filter circuit with Ripple Blocker is shown in Figure 5-2 and can be used for any of the above V_{DD} sections.

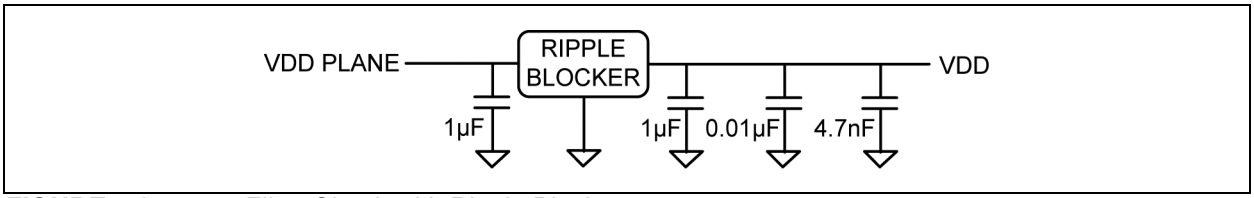

FIGURE 5-2: *Filter Circuit with Ripple Blocker.*

6.0 DIAGRAMS AND TEST CIRCUITS

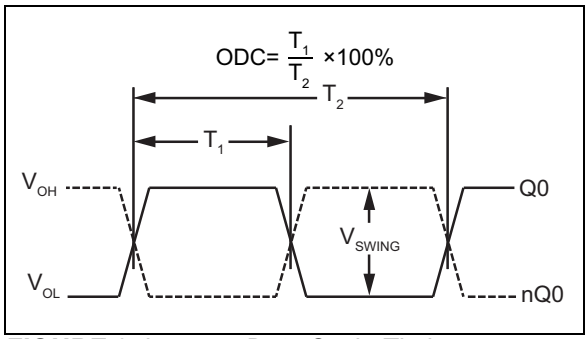

FIGURE 6-1: *Duty Cycle Timing.*

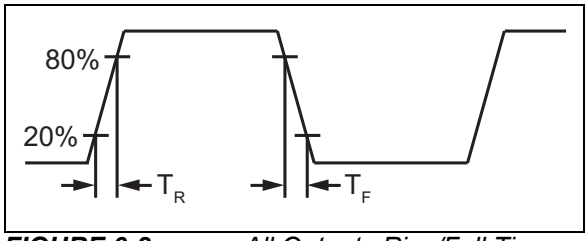

FIGURE 6-2: *All Outputs Rise/Fall Time.*

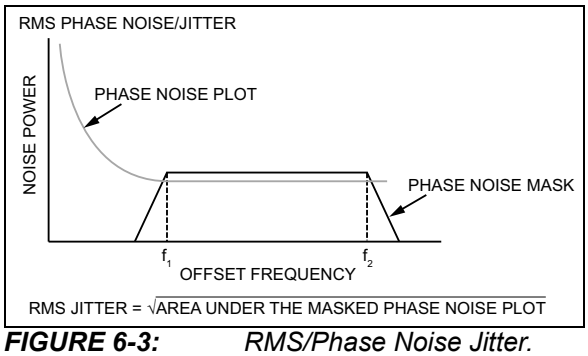

FIGURE 6-3: *RMS/Phase Noise Jitter.*

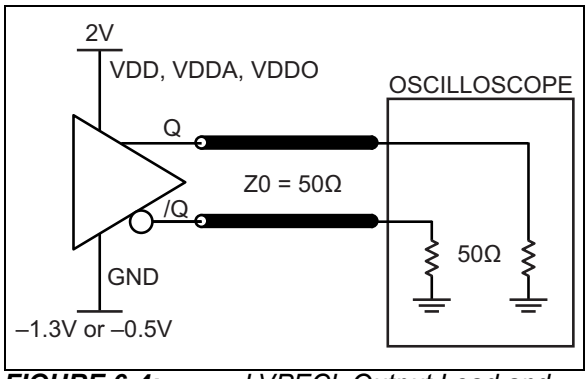

FIGURE 6-4: *LVPECL Output Load and Test Circuit.*

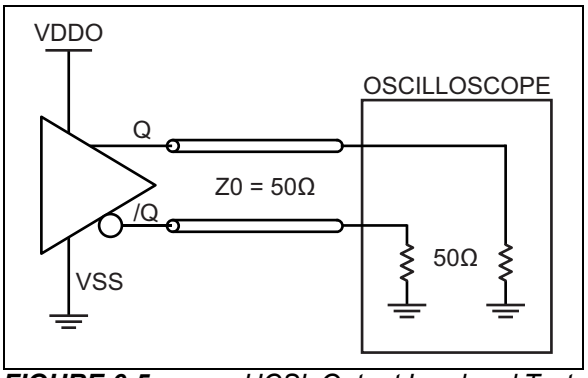

FIGURE 6-5: *HCSL Output Load and Test Circuit.*

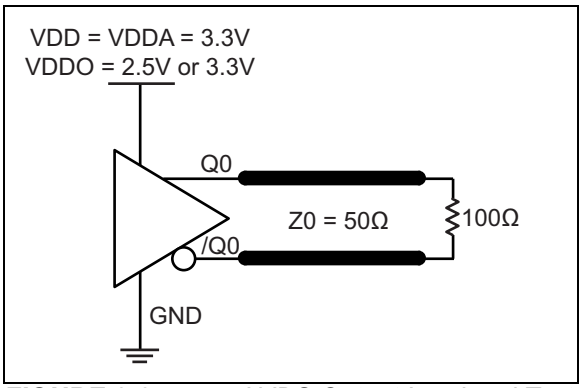

FIGURE 6-6: *LVDS Output Load and Test Circuit.*

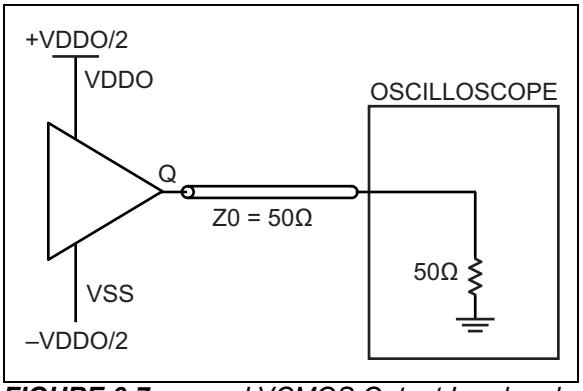

FIGURE 6-7: *LVCMOS Output Load and Test Circuit.*

© 2019 - 2023 Microchip Technology Inc. and its subsidiaries

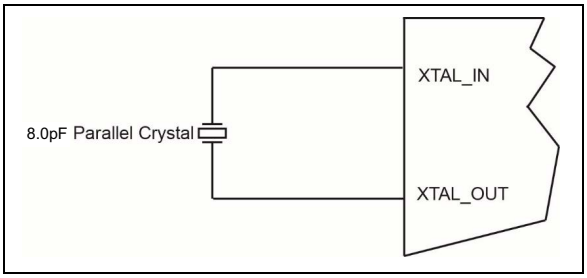

FIGURE 6-8: *SM806xxx Crystal Input Interface.*

6.1 HCSL Source Terminated per JESD8-18A

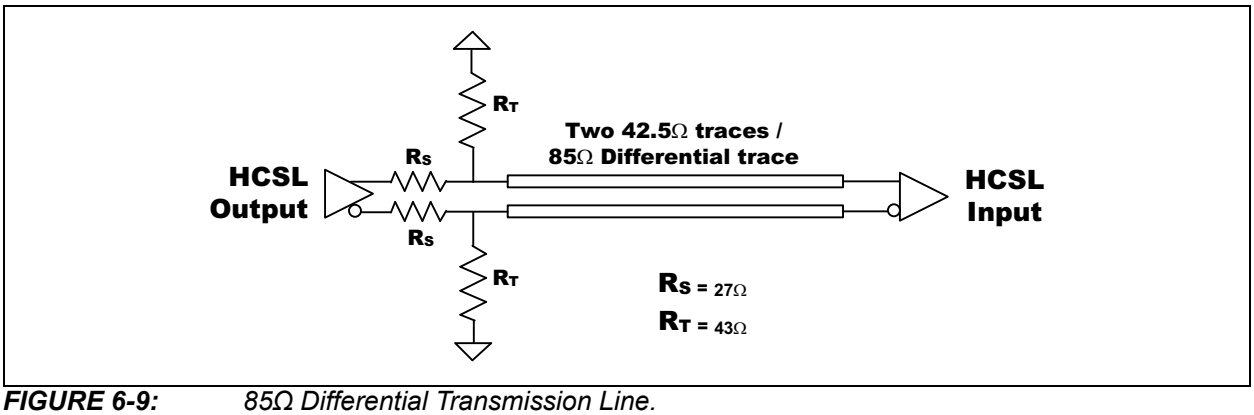

FIGURE 6-9: *85Ω Differential Transmission Line.*

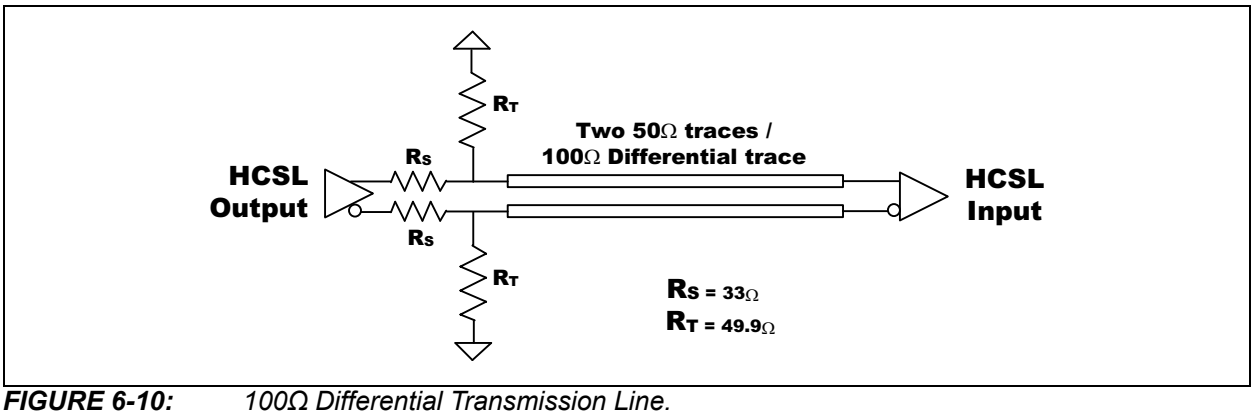

FIGURE 6-10: *100Ω Differential Transmission Line.*

7.0 PHASE NOISE PERFORMANCE

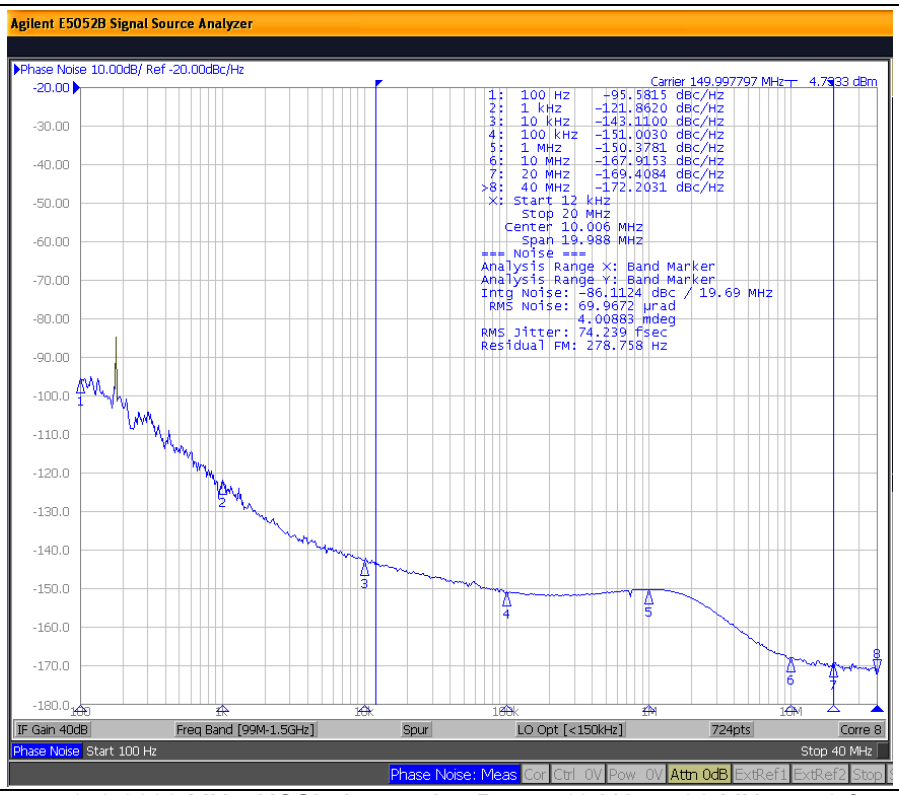

FIGURE 7-1: *150.0000 MHz, HCSL, Integration Range 12 kHz to 20 MHz: 74.2 fs_{RMS}.*

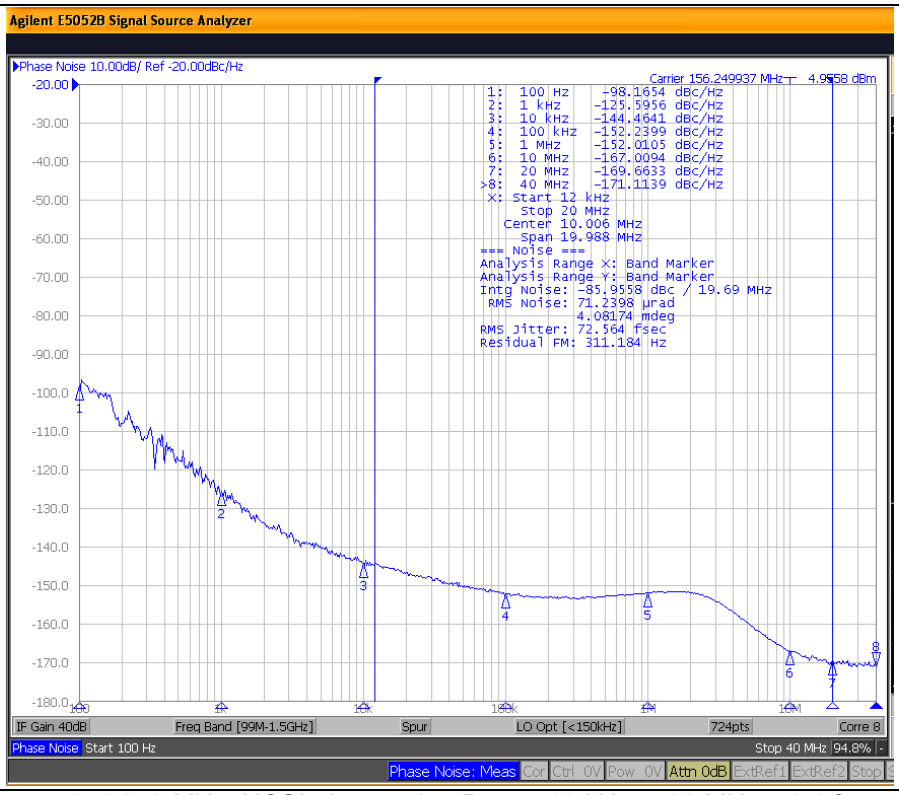

FIGURE 7-2: *156.250 MHz, HCSL, Integration Range 12 kHz to 20 MHz: 72.6 fs_{RMS}.*

© 2019 - 2023 Microchip Technology Inc. and its subsidiaries

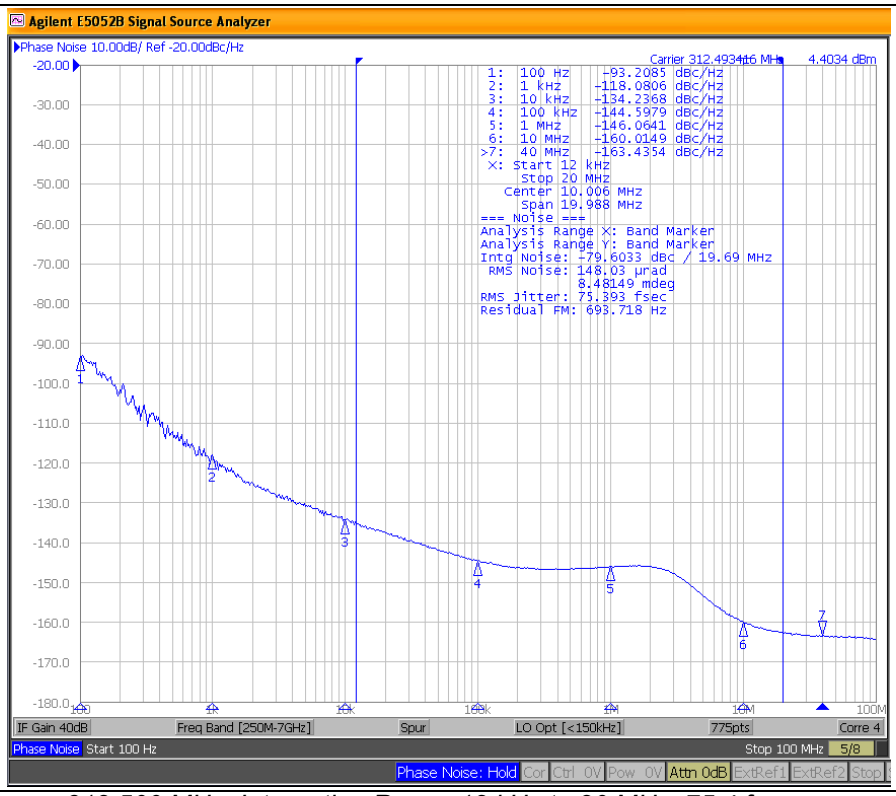

FIGURE 7-3: *312.500 MHz, Integration Range 12 kHz to 20 MHz: 75.4 fs_{RMS}.*

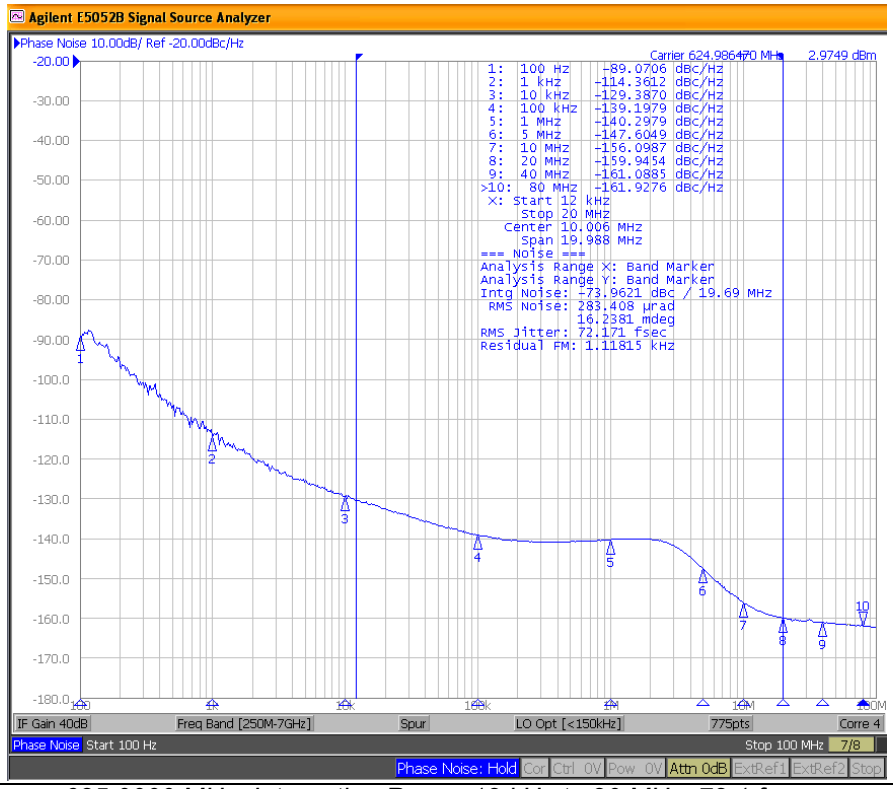

FIGURE 7-4: *625.0000 MHz, Integration Range 12 kHz to 20 MHz: 72.1 fs_{RMS}.*

8.0 PACKAGING INFORMATION

8.1 Package Marking Information

48-Lead VQFN*

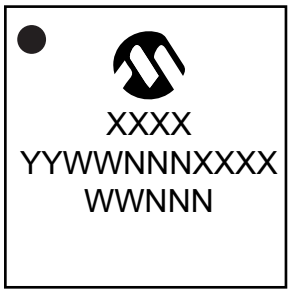

Example

24-Lead VQFN*

Example

Legend:	XX...X	Product code or customer-specific information
	Y	Year code (last digit of calendar year)
	YY	Year code (last 2 digits of calendar year)
	WW	Week code (week of January 1 is week ‘01’)
	NNN	Alphanumeric traceability code
	(e3)	Pb-free JEDEC® designator for Matte Tin (Sn)
	*	This package is Pb-free. The Pb-free JEDEC designator ((e3)) can be found on the outer packaging for this package.
	●, ▲, ▼	Pin one index is identified by a dot, delta up, or delta down (triangle mark).
Note:	In the event the full Microchip part number cannot be marked on one line, it will be carried over to the next line, thus limiting the number of available characters for customer-specific information. Package may or may not include the corporate logo.	
	Underbar (_) and/or Overbar (¯) symbol may not be to scale.	

© 2019 - 2023 Microchip Technology Inc. and its subsidiaries

48-Lead Very Thin Plastic Quad Flat, No Lead Package (PTA) - 7x7x0.9 mm Body [VQFN] With 5.1x5.1 mm Exposed Pad; Micrel Legacy Package QFN77-48L

Note:	For the most current package drawings, please see the Microchip Packaging Specification located at http://www.microchip.com/packaging

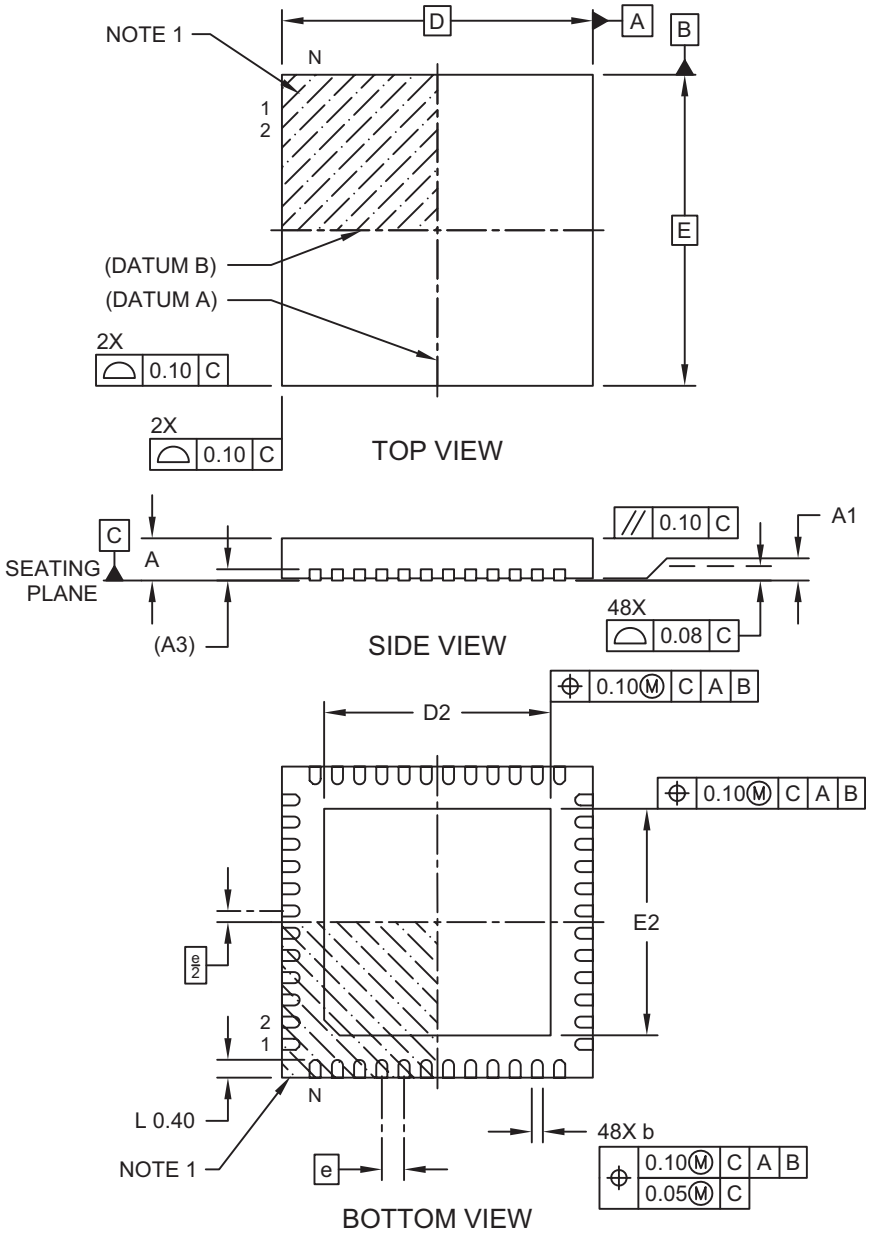

Microchip Technology Drawing C04-01270 Rev B Sheet 1 of 2

48-Lead Very Thin Plastic Quad Flat, No Lead Package (PTA) - 7x7x0.9 mm Body [VQFN] With 5.1x5.1 mm Exposed Pad; Micrel Legacy Package QFN77-48L

Note: For the most current package drawings, please see the Microchip Packaging Specification located at http://www.microchip.com/packaging

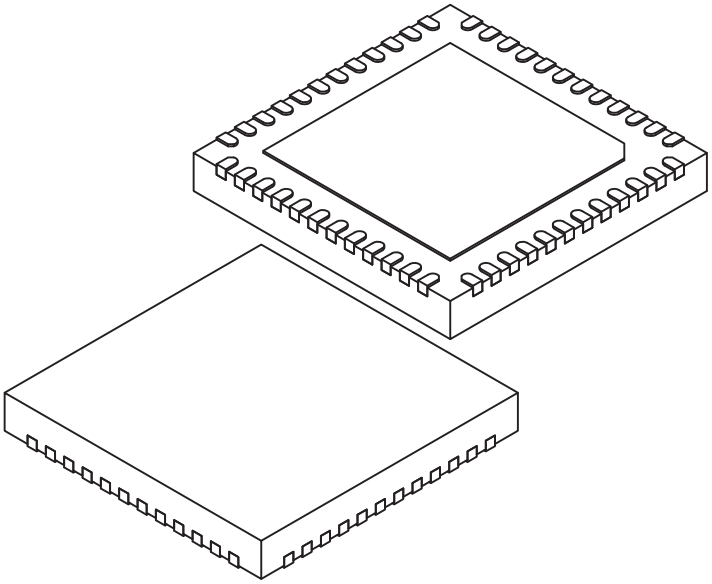

Units		MILLIMETERS		
Dimension Limits		MIN	NOM	MAX
Number of Terminals	N	48		
Pitch	e	0.50 BSC		
Overall Height	A	0.80	0.85	0.90
Standoff	A1	0.00	0.02	0.05
Terminal Thickness	A3	0.253 REF		
Overall Length	D	7.00 BSC		
Exposed Pad Length	D2	5.05	5.10	5.15
Overall Width	E	7.00 BSC		
Exposed Pad Width	E2	5.05	5.10	5.15
Terminal Width	b	0.20	0.25	0.30
Terminal Length	L	0.35	0.40	0.45

Notes:

1. Pin 1 visual index feature may vary, but must be located within the hatched area.
2. Package is saw singulated
3. Dimensioning and tolerancing per ASME Y14.5M
   BSC: Basic Dimension. Theoretically exact value shown without tolerances.
   REF: Reference Dimension, usually without tolerance, for information purposes only.

Microchip Technology Drawing C04-01270 Rev B Sheet 2 of 2

© 2019 - 2023 Microchip Technology Inc. and its subsidiaries

48-Lead Very Thin Plastic Quad Flat, No Lead Package (PTA) - 7x7x0.9 mm Body [VQFN] With 5.1x5.1 mm Exposed Pad; Micrel Legacy Package QFN77-48L

Note: For the most current package drawings, please see the Microchip Packaging Specification located at http://www.microchip.com/packaging

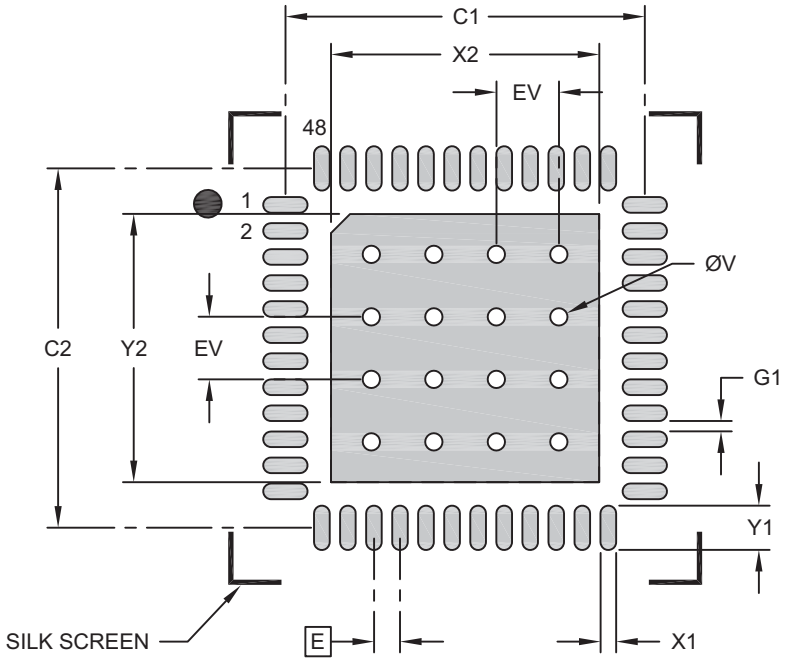

RECOMMENDED LAND PATTERN

Units		MILLIMETERS		
Dimension Limits		MIN	NOM	MAX
Contact Pitch	E		0.50 BSC	
Optional Center Pad Width	X2			5.15
Optional Center Pad Length	Y2			5.15
Contact Pad Spacing	C1		6.90	
Contact Pad Spacing	C2		6.90	
Contact Pad Width (X48)	X1			0.30
Contact Pad Length (X48)	Y1			0.85
Contact Pad to Contact Pad (X44)	G1	0.20		
Thermal Via Diameter	V		0.33	
Thermal Via Pitch	EV		1.20	

Notes:

1. Dimensioning and tolerancing per ASME Y14.5M
   BSC: Basic Dimension. Theoretically exact value shown without tolerances.
2. For best soldering results, thermal vias, if used, should be filled or tented to avoid solder loss during reflow process

Microchip Technology Drawing C04-3270 Rev B

24-Lead Very Thin Plastic Quad Flat, No Lead Package (9KX) - 4x4 mm Body [VQFN] With 2.7x2.7 mm Exposed Pad

Note:	For the most current package drawings, please see the Microchip Packaging Specification located at http://www.microchip.com/packaging

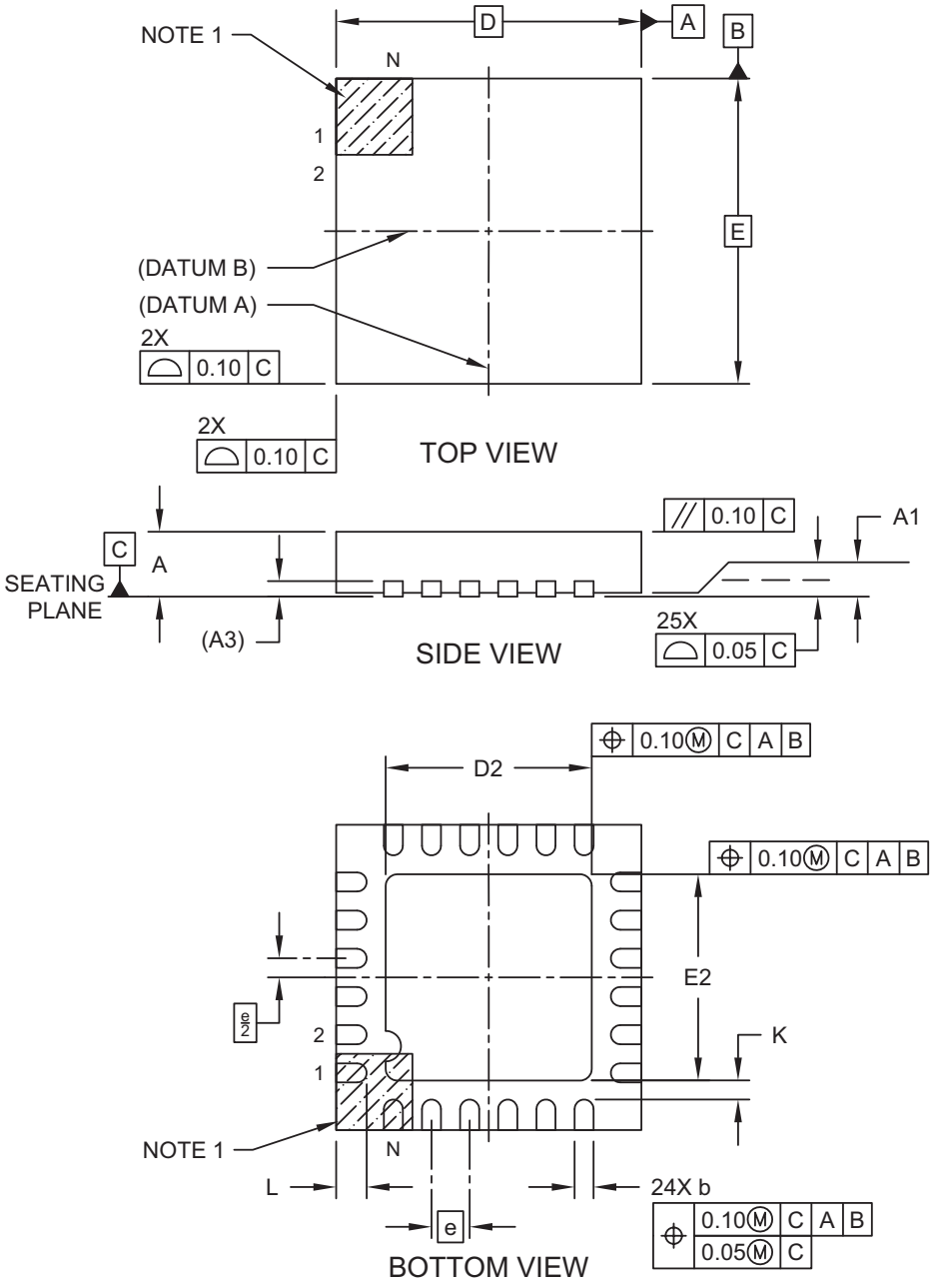

Microchip Technology Drawing C04-428 Rev A Sheet 1 of 2

© 2019 - 2023 Microchip Technology Inc. and its subsidiaries

24-Lead Very Thin Plastic Quad Flat, No Lead Package (9KX) - 4x4 mm Body [VQFN] With 2.7x2.7 mm Exposed Pad

Note: For the most current package drawings, please see the Microchip Packaging Specification located at http://www.microchip.com/packaging

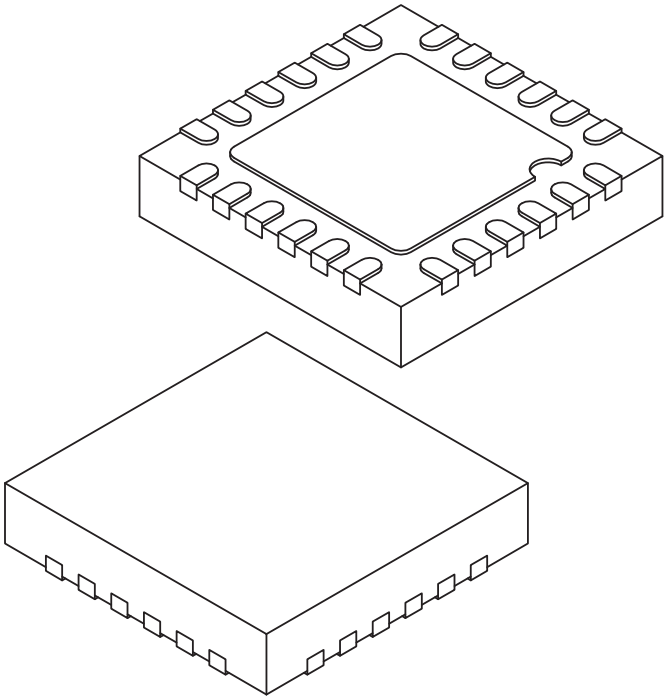

Units		MILLIMETERS		
Dimension Limits		MIN	NOM	MAX
Number of Terminals	N	24		
Pitch	e	0.50 BSC		
Overall Height	A	0.80	0.85	0.90
Standoff	A1	0.00	0.02	0.05
Terminal Thickness	A3	0.20 REF		
Overall Length	D	4.00 BSC		
Exposed Pad Length	D2	2.60	2.70	2.80
Overall Width	E	4.00 BSC		
Exposed Pad Width	E2	2.60	2.70	2.80
Terminal Width	b	0.18	0.25	0.30
Terminal Length	L	0.35	0.40	0.45
Terminal-to-Exposed-Pad	K	0.25 REF		

Notes:

1. Pin 1 visual index feature may vary, but must be located within the hatched area.
2. Package is saw singulated
3. Dimensioning and tolerancing per ASME Y14.5M

   BSC: Basic Dimension. Theoretically exact value shown without tolerances.

   REF: Reference Dimension, usually without tolerance, for information purposes only.

Microchip Technology Drawing C04-428 Rev A Sheet 2 of 2

24-Lead Very Thin Plastic Quad Flat, No Lead Package (9KX) - 4x4 mm Body [VQFN] With 2.7x2.7 mm Exposed Pad

Note: For the most current package drawings, please see the Microchip Packaging Specification located at http://www.microchip.com/packaging

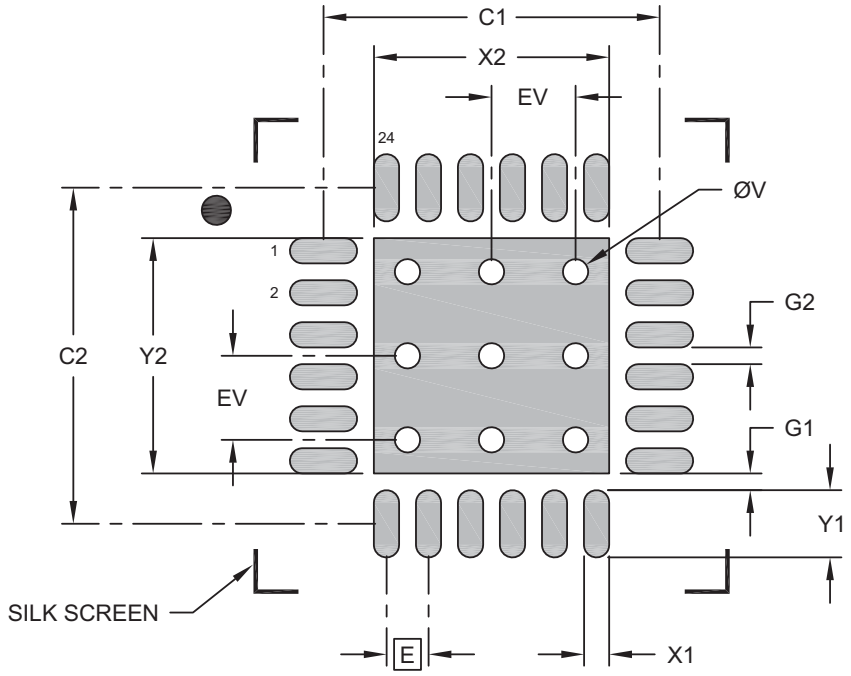

RECOMMENDED LAND PATTERN

Units		MILLIMETERS		
Dimension Limits		MIN	NOM	MAX
Contact Pitch	E		0.50 BSC	
Optional Center Pad Width	X2			2.80
Optional Center Pad Length	Y2			2.80
Contact Pad Spacing	C1		4.00	
Contact Pad Spacing	C2		4.00	
Contact Pad Width (X24)	X1			0.30
Contact Pad Length (X24)	Y1			0.80
Contact Pad to Center Pad (X24)	G1	0.20		
Contact Pad to Contact Pad (X20)	G2	0.20		
Thermal Via Diameter	V		0.30	
Thermal Via Pitch	EV		1.00	

Notes:

1. Dimensioning and tolerancing per ASME Y14.5M
   BSC: Basic Dimension. Theoretically exact value shown without tolerances.
2. For best soldering results, thermal vias, if used, should be filled or tented to avoid solder loss during reflow process

Microchip Technology Drawing C04-2428 Rev A

© 2019 - 2023 Microchip Technology Inc. and its subsidiaries

APPENDIX A: REVISION HISTORY

Revision A (August 2019)

- Initial release of SM806xxx data sheet DS20006212A.

Revision B (September 2019)

- Updated Functional Block Diagram.
- Updated Selectable Input: information in the Features section.
- Added a conditional note for the Frequency parameter of the Crystal Characteristics table.
- Added maximum value for RMS Phase Jitter and updated crystal information for Note 5 in the AC Electrical Characteristics table.

Revision C (March 2021)

- Added text below the Functional Block Diagram directing users to create their own version of the device.

Revision D (January 2023)

- Updated the Applications list to include PCIe Gen 5 and Gen 6

© 2019 - 2023 Microchip Technology Inc. and its subsidiaries

NOTES:

© 2019 - 2023 Microchip Technology Inc. and its subsidiaries

PRODUCT IDENTIFICATION SYSTEM

To order or obtain information, e.g., on pricing or delivery, contact your local Microchip representative or sales office.

PART NO.	X	X	X	X
Device	Voltage Option	Package Type	Temperature	Special Processing

Device:	SM806xxx:	Flexible Ultra-Low Jitter Clock Generator	
Voltage Option:	U	=	2.5V/3.3V
Package Type:	M	=	48- or 24-VQFN; see the Package Option Table.
Temperature:	G	=	–40°C to +85°C (NiPdAu Lead Free)
	Y	=	–40°C to +85°C (Matte-Sn Lead Free)
Special Processing:	Blank	=	Tray
	R	=	Tape and Reel

Package Option Table

Package Option	Package	Outputs	OE & FSEL Control	Reference Type (Ext. or Crystal)
1	48-Lead 7x7 VQFN	6	Yes	Both
2	24-Lead 4x4 VQFN	2	Yes	Crystal
3	24-Lead 4x4 VQFN	2	Yes	External

Note: Use the web tool at http://clockworks.microchip.com/timing to determine your desired configuration.

Examples:

a) SM806xxxUMG: Flexible Ultra-Low Jitter Clock Generator, 2.5V/3.3V Voltage Option, 48- or 24-VQFN Package, –40°C to +85°C Temperature Range (NiPdAu), Tray

b) SM806xxxUMGR: Flexible Ultra-Low Jitter Clock Generator, 2.5V/3.3V Voltage Option, 48- or 24-VQFN Package, –40°C to +85°C Temperature Range (NiPdAu), Tape & Reel

c) SM806xxxUMY: Flexible Ultra-Low Jitter Clock Generator, 2.5V/3.3V Voltage Option, 48- or 24-VQFN Package, –40°C to +85°C Temperature Range (Matte-Sn), Tray

d) SM806xxxUMYR: Flexible Ultra-Low Jitter Clock Generator, 2.5V/3.3V Voltage Option, 48- or 24-VQFN Package, –40°C to +85°C Temperature Range (Matte-Sn), Tape & Reel

Note 1: Tape and Reel identifier only appears in the catalog part number description. This identifier is used for ordering purposes and is not printed on the device package. Check with your Microchip Sales Office for package availability with the Tape and Reel option.

© 2019 - 2023 Microchip Technology Inc. and its subsidiaries

NOTES:

© 2019 - 2023 Microchip Technology Inc. and its subsidiaries

Note the following details of the code protection feature on Microchip products:

- Microchip products meet the specifications contained in their particular Microchip Data Sheet.
- Microchip believes that its family of products is secure when used in the intended manner, within operating specifications, and under normal conditions.
- Microchip values and aggressively protects its intellectual property rights. Attempts to breach the code protection features of Microchip product is strictly prohibited and may violate the Digital Millennium Copyright Act.
- Neither Microchip nor any other semiconductor manufacturer can guarantee the security of its code. Code protection does not mean that we are guaranteeing the product is "unbreakable" Code protection is constantly evolving. Microchip is committed to continuously improving the code protection features of our products.

This publication and the information herein may be used only with Microchip products, including to design, test, and integrate Microchip products with your application. Use of this information in any other manner violates these terms. Information regarding device applications is provided only for your convenience and may be superseded by updates. It is your responsibility to ensure that your application meets with your specifications. Contact your local Microchip sales office for additional support or, obtain additional support at https://www.microchip.com/en-us/support/design-help/client-support-services.

THIS INFORMATION IS PROVIDED BY MICROCHIP "AS IS". MICROCHIP MAKES NO REPRESENTATIONS OR WARRANTIES OF ANY KIND WHETHER EXPRESS OR IMPLIED, WRITTEN OR ORAL, STATUTORY OR OTHERWISE, RELATED TO THE INFORMATION INCLUDING BUT NOT LIMITED TO ANY IMPLIED WARRANTIES OF NON-INFRINGEMENT, MERCHANTABILITY, AND FITNESS FOR A PARTICULAR PURPOSE, OR WARRANTIES RELATED TO ITS CONDITION, QUALITY, OR PERFORMANCE.

IN NO EVENT WILL MICROCHIP BE LIABLE FOR ANY INDIRECT, SPECIAL, PUNITIVE, INCIDENTAL, OR CONSEQUENTIAL LOSS, DAMAGE, COST, OR EXPENSE OF ANY KIND WHATSOEVER RELATED TO THE INFORMATION OR ITS USE, HOWEVER CAUSED, EVEN IF MICROCHIP HAS BEEN ADVISED OF THE POSSIBILITY OR THE DAMAGES ARE FORESEEABLE. TO THE FULLEST EXTENT ALLOWED BY LAW, MICROCHIP'S TOTAL LIABILITY ON ALL CLAIMS IN ANY WAY RELATED TO THE INFORMATION OR ITS USE WILL NOT EXCEED THE AMOUNT OF FEES, IF ANY, THAT YOU HAVE PAID DIRECTLY TO MICROCHIP FOR THE INFORMATION.

Use of Microchip devices in life support and/or safety applications is entirely at the buyer's risk, and the buyer agrees to defend, indemnify and hold harmless Microchip from any and all damages, claims, suits, or expenses resulting from such use. No licenses are conveyed, implicitly or otherwise, under any Microchip intellectual property rights unless otherwise stated.

For information regarding Microchip's Quality Management Systems, please visit www.microchip.com/quality.

Trademarks

The Microchip name and logo, the Microchip logo, Adaptec, AVR, AVR logo, AVR Freaks, BesTime, BitCloud, CryptoMemory, CryptoRF, dsPIC, flexPWR, HELDO, IGLOO, JukeBlox, KeeLoq, Kleer, LANCheck, LinkMD, maXStylus, maXTouch, MediaLB, megaAVR, Microsemi, Microsemi logo, MOST, MOST logo, MPLAB, OptoLyzer, PIC, picoPower, PICSTART, PIC32 logo, PolarFire, Prochip Designer, QTouch, SAM-BA, SenGenuity, SpyNIC, SST, SST Logo, SuperFlash, Symmetricom, SyncServer, Tachyon, TimeSource, tinyAVR, UNI/O, Vectron, and XMEGA are registered trademarks of Microchip Technology Incorporated in the U.S.A. and other countries.

AgileSwitch, APT, ClockWorks, The Embedded Control Solutions Company, EtherSynch, Flashtec, Hyper Speed Control, HyperLight Load, Libero, motorBench, mTouch, Powermite 3, Precision Edge, ProASIC, ProASIC Plus, ProASIC Plus logo, Quiet- Wire, SmartFusion, SyncWorld, Temux, TimeCesium, TimeHub, TimePictra, TimeProvider, TrueTime, and ZL are registered trademarks of Microchip Technology Incorporated in the U.S.A.

Adjacent Key Suppression, AKS, Analog-for-the-Digital Age, Any Capacitor, AnyIn, AnyOut, Augmented Switching, BlueSky, BodyCom, Clockstudio, CodeGuard, CryptoAuthentication, CryptoAutomotive, CryptoCompanion, CryptoController, dsPICDEM, dsPICDEM.net, Dynamic Average Matching, DAM, ECAN, Espresso T1S, EtherGREEN, GridTime, IdealBridge, In-Circuit Serial Programming, ICSP, INICnet, Intelligent Paralleling, IntelliMOS, Inter-Chip Connectivity, JitterBlocker, Knob-on-Display, KoD, maxCrypto, maxView, memBrain, Mindi, MiWi, MPASM, MPF, MPLAB Certified logo, MPLIB, MPLINK, MultiTRAK, NetDetach, Omniscient Code Generation, PICDEM, PICDEM.net, PICkit, PICtail, PowerSmart, PureSilicon, QMatrix, REAL ICE, Ripple Blocker, RTAX, RTG4, SAM-ICE, Serial Quad I/O, simpleMAP, SimpliPHY, SmartBuffer, SmartHLS, SMART-I.S., storClad, SQI, SuperSwitcher, SuperSwitcher II, Switchtec, SynchroPHY, Total Endurance, Trusted Time, TSHARC, USBCheck, VariSense, VectorBlox, VeriPHY, ViewSpan, WiperLock, XpressConnect, and ZENA are trademarks of Microchip Technology Incorporated in the U.S.A. and other countries.

SQTP is a service mark of Microchip Technology Incorporated in the U.S.A.

The Adaptec logo, Frequency on Demand, Silicon Storage Technology, and Symmcom are registered trademarks of Microchip Technology Inc. in other countries.

GestIC is a registered trademark of Microchip Technology Germany II GmbH & Co. KG, a subsidiary of Microchip Technology Inc., in other countries.

All other trademarks mentioned herein are property of their respective companies.

© 2019 - 2023, Microchip Technology Incorporated and its subsidiaries.

All Rights Reserved.

ISBN: 978-1-6683-1905-5

Worldwide Sales and Service

AMERICAS

Corporate Office
2355 West Chandler Blvd.
Chandler, AZ 85224-6199
Tel: 480-792-7200
Fax: 480-792-7277
Technical Support:
http://www.microchip.com/support
Web Address:
www.microchip.com

Atlanta
Duluth, GA
Tel: 678-957-9614
Fax: 678-957-1455

Austin, TX
Tel: 512-257-3370

Boston
Westborough, MA
Tel: 774-760-0087
Fax: 774-760-0088

Chicago
Itasca, IL
Tel: 630-285-0071
Fax: 630-285-0075

Dallas
Addison, TX
Tel: 972-818-7423
Fax: 972-818-2924

Detroit
Novi, MI
Tel: 248-848-4000

Houston, TX
Tel: 281-894-5983

Indianapolis
Noblesville, IN
Tel: 317-773-8323
Fax: 317-773-5453
Tel: 317-536-2380

Los Angeles
Mission Viejo, CA
Tel: 949-462-9523
Fax: 949-462-9608
Tel: 951-273-7800

Raleigh, NC
Tel: 919-844-7510

New York, NY
Tel: 631-435-6000

San Jose, CA
Tel: 408-735-9110
Tel: 408-436-4270

Canada - Toronto
Tel: 905-695-1980
Fax: 905-695-2078

ASIA/PACIFIC

Australia - Sydney
Tel: 61-2-9868-6733

China - Beijing
Tel: 86-10-8569-7000

China - Chengdu
Tel: 86-28-8665-5511

China - Chongqing
Tel: 86-23-8980-9588

China - Dongguan
Tel: 86-769-8702-9880

China - Guangzhou
Tel: 86-20-8755-8029

China - Hangzhou
Tel: 86-571-8792-8115

China - Hong Kong SAR
Tel: 852-2943-5100

China - Nanjing
Tel: 86-25-8473-2460

China - Qingdao
Tel: 86-532-8502-7355

China - Shanghai
Tel: 86-21-3326-8000

China - Shenyang
Tel: 86-24-2334-2829

China - Shenzhen
Tel: 86-755-8864-2200

China - Suzhou
Tel: 86-186-6233-1526

China - Wuhan
Tel: 86-27-5980-5300

China - Xian
Tel: 86-29-8833-7252

China - Xiamen
Tel: 86-592-2388138

China - Zhuhai
Tel: 86-756-3210040

ASIA/PACIFIC

India - Bangalore
Tel: 91-80-3090-4444

India - New Delhi
Tel: 91-11-4160-8631

India - Pune
Tel: 91-20-4121-0141

Japan - Osaka
Tel: 81-6-6152-7160

Japan - Tokyo
Tel: 81-3-6880- 3770

Korea - Daegu
Tel: 82-53-744-4301

Korea - Seoul
Tel: 82-2-554-7200

Malaysia - Kuala Lumpur
Tel: 60-3-7651-7906

Malaysia - Penang
Tel: 60-4-227-8870

Philippines - Manila
Tel: 63-2-634-9065

Singapore
Tel: 65-6334-8870

Taiwan - Hsin Chu
Tel: 886-3-577-8366

Taiwan - Kaohsiung
Tel: 886-7-213-7830

Taiwan - Taipei
Tel: 886-2-2508-8600

Thailand - Bangkok
Tel: 66-2-694-1351

Vietnam - Ho Chi Minh
Tel: 84-28-5448-2100

EUROPE

Austria - Wels
Tel: 43-7242-2244-39
Fax: 43-7242-2244-393

Denmark - Copenhagen
Tel: 45-4485-5910
Fax: 45-4485-2829

Finland - Espoo
Tel: 358-9-4520-820

France - Paris
Tel: 33-1-69-53-63-20
Fax: 33-1-69-30-90-79

Germany - Garching
Tel: 49-8931-9700

Germany - Haan
Tel: 49-2129-3766400

Germany - Heilbronn
Tel: 49-7131-72400

Germany - Karlsruhe
Tel: 49-721-625370

Germany - Munich
Tel: 49-89-627-144-0
Fax: 49-89-627-144-44

Germany - Rosenheim
Tel: 49-8031-354-560

Israel - Ra'anana
Tel: 972-9-744-7705

Italy - Milan
Tel: 39-0331-742611
Fax: 39-0331-466781

Italy - Padova
Tel: 39-049-7625286

Netherlands - Drunen
Tel: 31-416-690399
Fax: 31-416-690340

Norway - Trondheim
Tel: 47-7288-4388

Poland - Warsaw
Tel: 48-22-3325737

Romania - Bucharest
Tel: 40-21-407-87-50

Spain - Madrid
Tel: 34-91-708-08-90
Fax: 34-91-708-08-91

Sweden - Gothenberg
Tel: 46-31-704-60-40

Sweden - Stockholm
Tel: 46-8-5090-4654

UK - Wokingham
Tel: 44-118-921-5800
Fax: 44-118-921-5820

© 2019 - 2023 Microchip Technology Inc. and its subsidiaries