⚠The products in this catalog are not recommended for new design

3-terminal filters
For Signal line
ACF series

RoHS | REACH SVHC-Free | Halogen Free | Lead Free

ACF321825 type

Product Portal | Search | Simulation Model | Tech Library | Tech Note

FEATURES

- It is a product with excellent attenuation characteristics in which the T-type filter circuit is magnetically shielded with ferrite.
- Achieve excellent attenuation characteristics by using it for circuits with stable grounds.
- Does not require mounting space due to vertical mounting design, making it perfect for high-density circuits.
- Use this product under reflow soldering conditions.

APPLICATION

- HE devices (TVs, VTRs, CD players, electronic musical instruments, PCs, etc.)
- OA equipment (Computers, terminals, facsimiles, etc.)
- FA equipment (Robots, NC machine tools, process controllers, etc.)

PART NUMBER CONSTRUCTION

ACF	321825	-	223	-	T	D01
Series name	L×W×T dimensions (mm)		Capacitance (pF)		Packaging style	Internal code

CHARACTERISTICS SPECIFICATION TABLE

Insertion loss 25dB frequency range (MHz)	Rated voltage (V)max.	Rated current (mA)max.	DC resistance [Terminal No.1 to 3] (Ω)max.	Insulation resistance [Terminal No.1 to 2/No.2 to 3] (MΩ)min.	Part No.
11 to 55	20	300	0.15	1000	ACF321825-223-TD01
17 to 60	20	300	0.15	1000	ACF321825-103-TD01
22 to 75	20	300	0.15	1000	ACF321825-682-TD01
30 to 85	20	300	0.15	1000	ACF321825-472-TD01
37 to 90	20	300	0.15	1000	ACF321825-332-TD01
45 to 105	20	300	0.15	1000	ACF321825-222-TD01
60 to 115	20	300	0.15	1000	ACF321825-152-TD01
80 to 140	20	300	0.15	1000	ACF321825-102-TD01
95 to 150	20	300	0.15	1000	ACF321825-681-TD01
120 to 180	20	300	0.15	1000	ACF321825-471-TD01
130 to 210	20	300	0.15	1000	ACF321825-331-TD01
170 to 250	20	300	0.15	1000	ACF321825-221-TD01
205 to 280	20	300	0.15	1000	ACF321825-151-TD01
265 to 340	20	300	0.15	1000	ACF321825-101-TD01
340 to 420	20	300	0.15	1000	ACF321825-680-TD01
420 to 500	20	300	0.15	1000	ACF321825-470-TD01
500 to 600	20	300	0.15	1000	ACF321825-330-TD01
600 to 700	20	300	0.15	1000	ACF321825-220-TD01

⚠ Please be sure to request delivery specifications that provide further details on the features and specifications of the products for proper and safe use.
Please note that the contents may change without any prior notice due to reasons such as upgrading.

ACF321825 type

SHAPE & DIMENSIONS

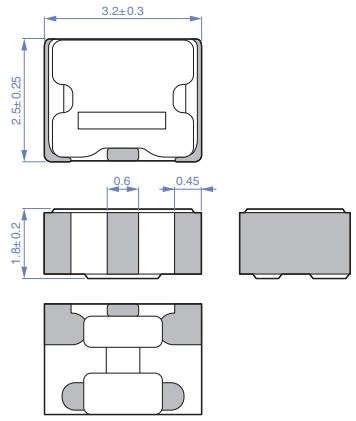

Dimensions in mm

RECOMMENDED LAND PATTERN

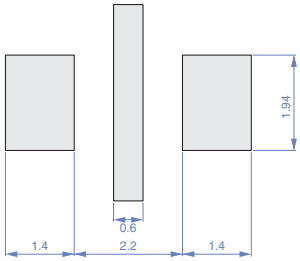

Dimensions in mm

CIRCUIT DIAGRAM

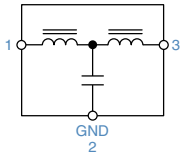

• No polarity

RECOMMENDED REFLOW PROFILE

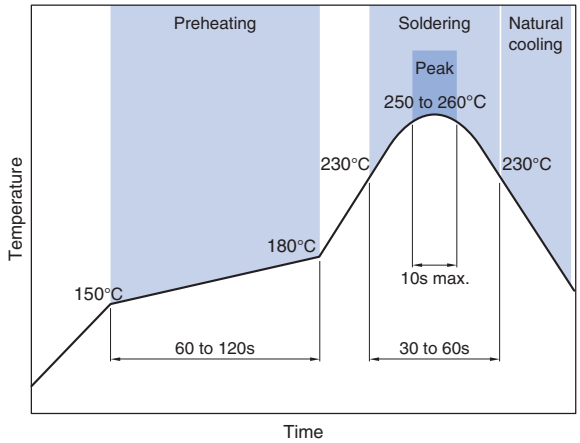

PACKAGING STYLE

REEL DIMENSIONS

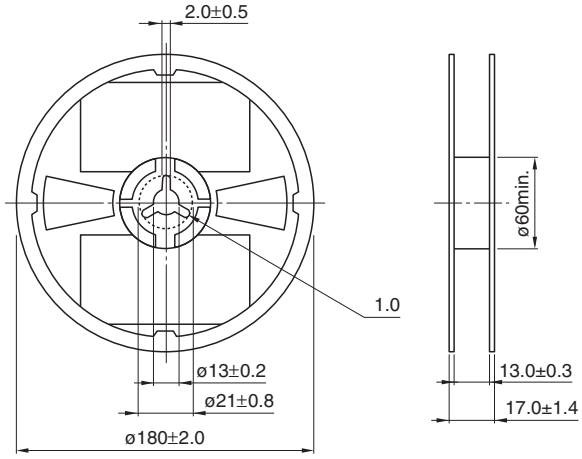

Dimensions in mm

TAPE DIMENSIONS

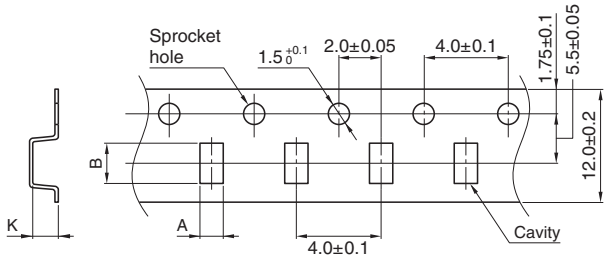

Dimensions in mm

Type	A	B	K
ACF321825	2.2±0.1	3.65±0.1	3.0max.

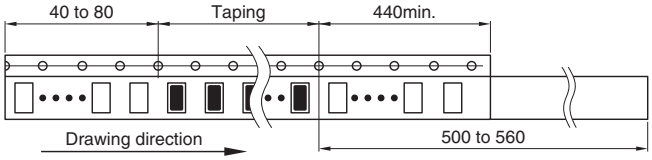

Dimensions in mm

Package quantity

Package quantity	1,000 pcs/reel

TEMPERATURE RANGE, INDIVIDUAL WEIGHT

Operating temperature range	Storage temperature range*	Individual weight
–20 to +85 °C	–20 to +85 °C	70 mg

* The storage temperature range is for after the assembly.

REMINDERS FOR USING THESE PRODUCTS

Before using these products, be sure to request the delivery specifications.

SAFETY REMINDERS

Please pay sufficient attention to the warnings for safe designing when using this products.

⚠ REMINDERS

- The storage period is less than 12 months. Be sure to follow the storage conditions (temperature: 5 to 40°C, humidity: 10 to 75% RH or less).
  If the storage period elapses, the soldering of the terminal electrodes may deteriorate.
- Do not use or store in locations where there are conditions such as gas corrosion (salt, acid, alkali, etc.).
- Before soldering, be sure to preheat components.
  The preheating temperature should be set so that the temperature difference between the solder temperature and chip temperature does not exceed 150°C.
- Soldering corrections after mounting should be within the range of the conditions determined in the specifications.
  If overheated, a short circuit, performance deterioration, or lifespan shortening may occur.
- When embedding a printed circuit board where a chip is mounted to a set, be sure that residual stress is not given to the chip due to the overall distortion of the printed circuit board and partial distortion such as at screw tightening portions.
- Self heating (temperature increase) occurs when the power is turned ON, so the tolerance should be sufficient for the set thermal design.
- Carefully lay out the coil for the circuit board design of the non-magnetic shield type.
  A malfunction may occur due to magnetic interference.
- Use a wrist band to discharge static electricity in your body through the grounding wire.
- Do not expose the products to magnets or magnetic fields.
- Do not use for a purpose outside of the contents regulated in the delivery specifications.
- The products listed on this catalog are intended for use in general electronic equipment (AV equipment, telecommunications equipment, home appliances, amusement equipment, computer equipment, personal equipment, office equipment, measurement equipment, industrial robots) under a normal operation and use condition.
  The products are not designed or warranted to meet the requirements of the applications listed below, whose performance and/or quality require a more stringent level of safety or reliability, or whose failure, malfunction or trouble could cause serious damage to society, person or property.
  If you intend to use the products in the applications listed below or if you have special requirements exceeding the range or conditions set forth in the each catalog, please contact us.

(1) Aerospace/aviation equipment
(2) Transportation equipment (cars, electric trains, ships, etc.)
(3) Medical equipment
(4) Power-generation control equipment
(5) Atomic energy-related equipment
(6) Seabed equipment
(7) Transportation control equipment
(8) Public information-processing equipment
(9) Military equipment
(10) Electric heating apparatus, burning equipment
(11) Disaster prevention/crime prevention equipment
(12) Safety equipment
(13) Other applications that are not considered general-purpose applications

When designing your equipment even for general-purpose applications, you are kindly requested to take into consideration securing protection circuit/device or providing backup circuits in your equipment.