IAG/IUG/IEG/CEG/LEG SERIES

Hydraulic Magnetic Circuit Protectors

Introduction

The Airpax™ IAG/IUG/IEG/CEG/LEG magnetic circuit protectors provide low-cost power switching, reliable circuit protection and accurate circuit control for equipment in the international marketplace.

IEG models meet IEC spacing requirements which is mandatory for equipment that must comply with IEC specifications 601 and 950. In addition, they are UL Recognized as supplementary protectors per UL STD. 1077, CSA Certified as supplementary protectors per CSA C22.2–No. 235, TUV Approved to IEC60947-2, CCC Approved and CE Compliant. IAG models are for those applications where the unit's inherent attributes are desired, but compliance with the various standards is not required.

Designed using the latest in sensitive hydraulic magnetic technology, the IAG/IUG/IEG/CEG/LEG line adapts itself to many applications and environments. They're ideal for data processing and business machines, medical instrumentation, broadcast equipment, vending and amusement machines, military applications and wherever precision operation is required. Temperature differences which affect fuses and other thermal devices are not a concern.

One important feature of this protector line is a "trip free" action, which means the circuit will trip in the presence of an overload even though the handle is held in the ON position. The delay mechanism senses the fault and the contacts open.

The IAG/IUG/IEG/CEG/LEG is available in a wide variety of configurations including series, series with auxiliary switch, shunt and relay with a choice of delays and ratings in either DC, 50/60Hz or 400Hz versions. Handles come in seven different colors and international markings are standard. Single or multi-pole versions are available, with a variety of pole arrangements to meet your specifications. Four pole models require a double toggle handle. Units with a handle per pole come in one through six pole assemblies.

SINGLE POLE CIRCUIT PROTECTORS

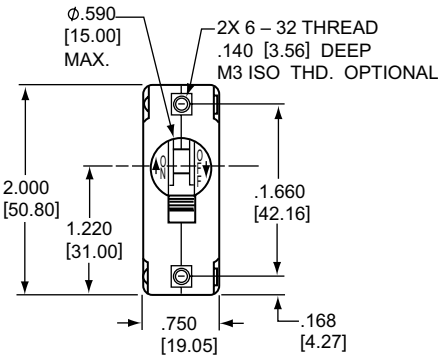

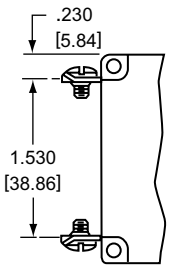

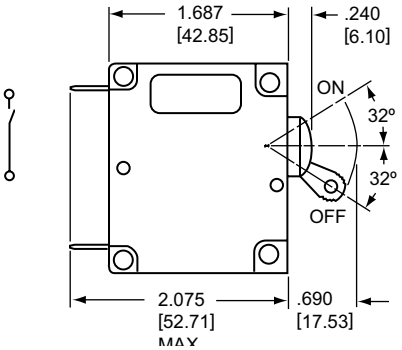

Single Pole Mounting Detail

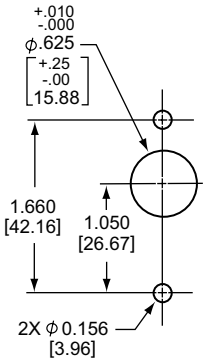

Note: Tolerance ±.015 [.38] unless noted. Dimensions in brackets [ ] are millimeters.
LEG Type Units Require Screw Terminals

Copyright © 2020 Sensata Technologies, Inc.

Two Pole Protectors

An assembly consisting of two single pole units, having their trip mechanisms internally coupled and with a single toggle handle, forms the IEG11 with quick-connect D.I.N.-style terminals. Individual poles may differ in ratings, delays and internal connections. An auxiliary switch may be included in either or both poles, allowing you to mix SELV and hazardous voltages. Rugged screw-type terminals can be provided, in which case the designation would be IEG66. The IEGH offers a toggle handle for each pole. LEG type units are avavailable only in one or two pole configurations.

Three Pole and Four Pole Protectors

The three pole construction consists of three single pole units assembled with an internal mechanical interlock which actuates all units simultaneously. A single toggle handle operates all three poles for quick and convenient control, or if preferred, a handle per pole is available. The four pole construction consists of four single pole units assembled with an internal mechanical interlock which actuates all units simultaneously. A double toggle handle operates all four poles. The individual poles need not have identical characteristics and any series trip pole may have an auxiliary switch. If screw-type terminals are required, the breaker designation will be IEG666 for a three pole version and IEG6666 for a four pole version.

Protector poles are numbered consecutively when viewed from the terminal side, with the ON position up, starting with Pole #1 on the left side and proceeding to the right.

IAG/IUG/IEG/CEG/LEG

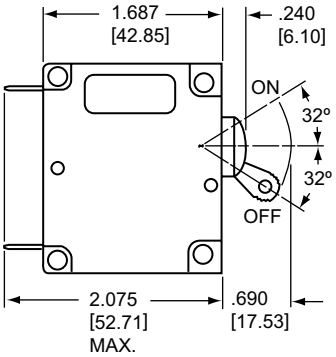

IAG/IUG/IEG/CEG/LEG Multi-Pole Circuit Breakers

Two Pole*

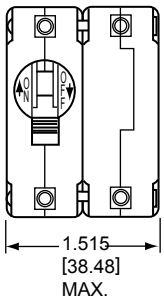

Three Pole*

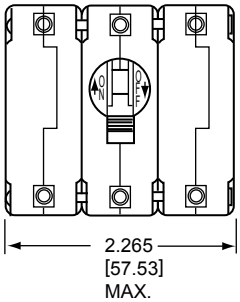

Four Pole*

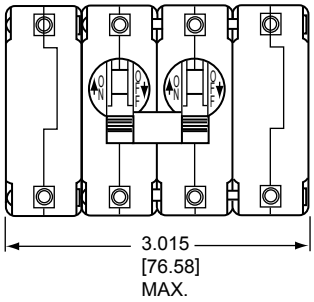

(Optional: Handle may be located in Pole 1 instead of Pole 2)

LEG Type Units Require Screw Terminals

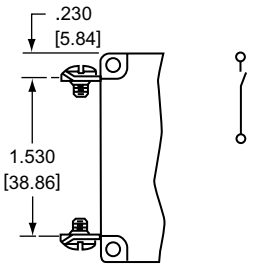

Panel Mounting Detail:
Tolerance for Mtg. ±.005 [.13] unless noted.

Two Pole*

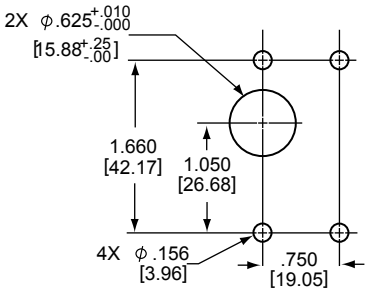

Three Pole*

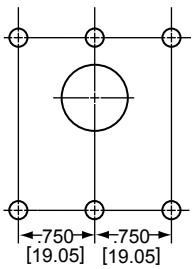

Four Pole*

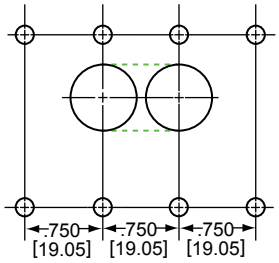

Note: Tolerance ± .015 [.38] unless noted. Dimensions in brackets [ ] are millimeters.

**See Single Pole Mounting Detail for hole sizes and locations. LEG type units are only available in one or two poles.*

Copyright © 2020 Sensata Technologies, Inc.

The IAGH/IUGH/IEGH/CEGH/LEGH two, three and four pole models are available with a handle per pole. LEGH type units are available only in two pole models.

IAGH/IUGH/IEGH/CEGH/LEGH Protectors

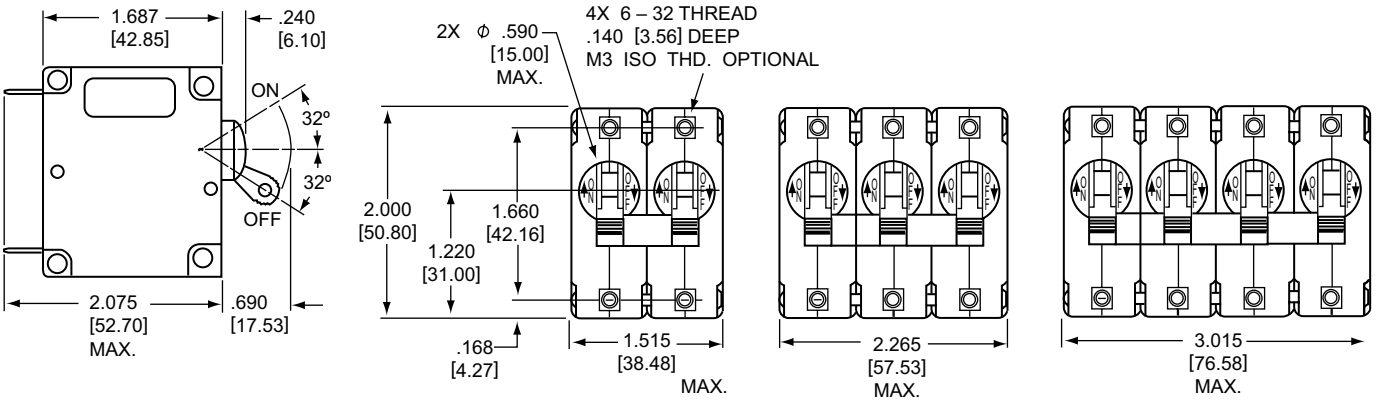

LEG
(Requires Screw Terminals)

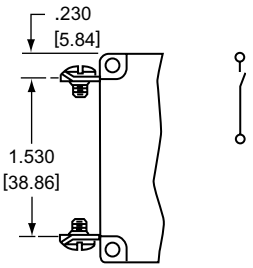

Panel Mounting Detail:
Tolerance for Mtg. ±.005 [.13] unless noted.

Two Pole

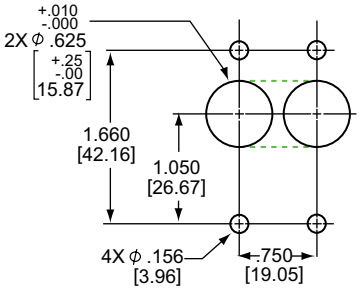

Three Pole*

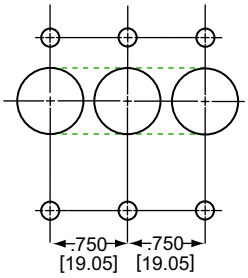

Four Pole*

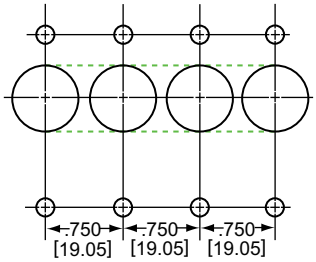

**See Two Pole Mounting Detail for hole sizes and locations.*

NOTE: We recommend machining slots into your panel for 2 or more poles. This eliminates the need to dissemble/reassemble the handle ties to be able to insert the handles thru indvidiually drilled holes.LEG type units are only available in one or two poles.

LEG/LEGH Barriers (required)

In order to meet UL listing requirements, the LEG/LEGH two pole model requires barriers. Available with a standard straight barrier or an optional "Z" type barrier.

Standard Barrier

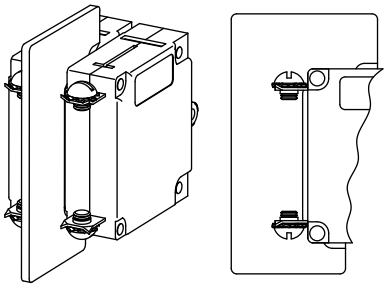

Optional "Z" Barrier

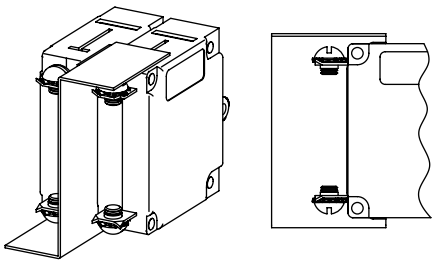

Note: Tolerance ± .015 [.38] unless noted. Dimensions in brackets [ ] are millimeters.

Copyright © 2020 Sensata Technologies, Inc.

ROCKER CIRCUIT PROTECTORS (IAGZX/IUGZX/IEGZX/CEGX/CEGZX/LEGZX)

The IAGZX/IUGZX/IEGZX/CEGZX/LEGZX styles offer an attractive rocker actuator version of our popular IAG/IUG/IEG/CEG/LEG family. Designed with the operator in mind, each features handles with a concave surface and aesthetic appearance for front panel applications.

The IAGZX/IUGZX/IEGZX/CEGZX/LEGZX is available in a choice of five single colors: black, red, grey, orange or white.

The IAGZX/IUGZX/IEGZX/CEGZX/LEGZX style adds our "EZ" options of contrasting dual color rocker actuators, affording a clear visual indication of the handle position and integrated handle guards, to help prevent accidental turn-on and turn-off of the unit. Available with a black rocker and white, red or green indicator color for either ON or OFF indication.

Single, Two & Three Pole

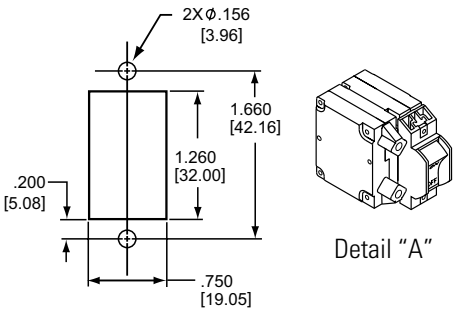

Panel Mounting Detail:
Tolerance for Mtg. ±.005 [.13] unless noted.

IAGZX/IUGZX/IEGZX/CEGZX/LEGZX

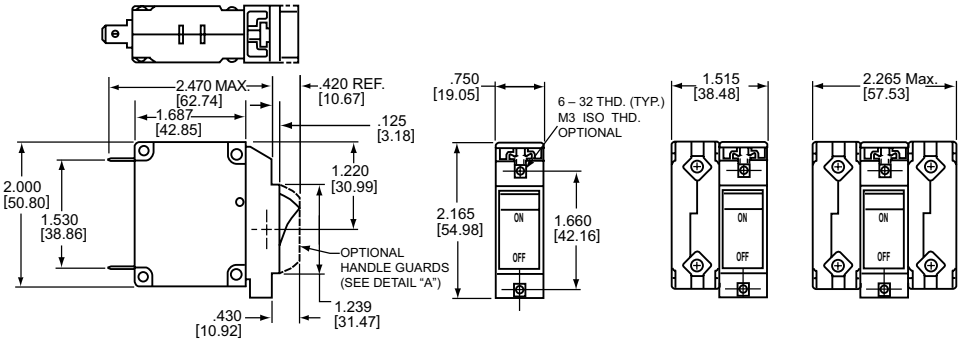

Note: Tolerance ± .015 [.38] unless noted. Dimensions in brackets [ ] are millimeters.
** LEG type units are only available in one or two poles.*

Copyright © 2020 Sensata Technologies, Inc.

The innovative new design of our IEG BX style circuit breaker features a flat front rocker that not only satisfies your aesthetic needs, it guards against accidental actuation while providing the highest degree of circuit protection and quality. Only Sensata Technologies offers this new standard in user interface, providing additional peace of mind that guards alone can't supply.

Available on a variety of versions with a full range of agency approvals, the new IEG BX style circuit breakers meet or exceed all current performance specifications, including interrupting capacities up to 50,000 amperes. Various guard options offer additional and increasing levels of actuation protection performance. The two shot mold on the flat rocker surface provides a clean, crisp legend that can withstand demanding use.

IAGBX/IUGBX/IEGBX/CEGBX/LEGBX

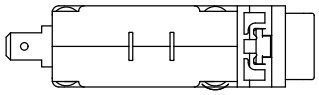

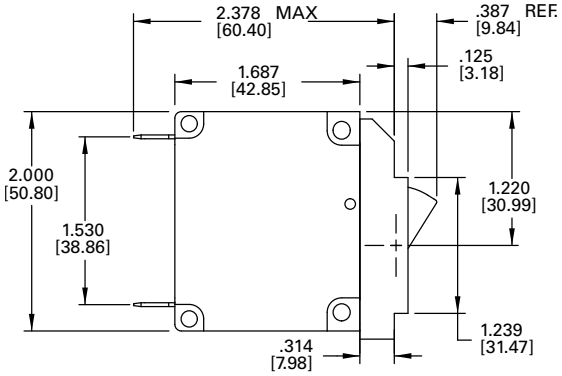

SINGLE POLE

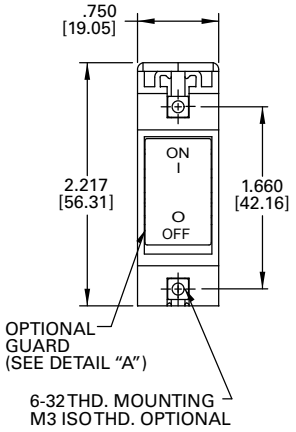

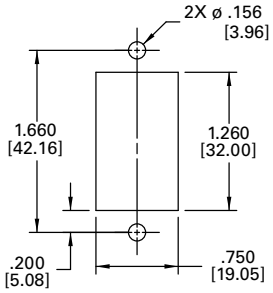

Panel Mounting Detail

MOUNTING DETAIL TOLERANCE:
±.005 [.13] UNLESS NOTED

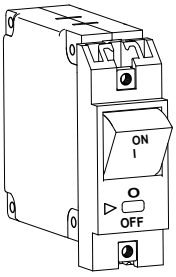

Handle position "OFF" with guard (6th decision, G)

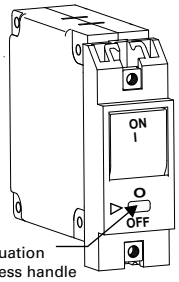

Handle position "ON" with guard (6th decision, G)

Actuation access handle (see note)

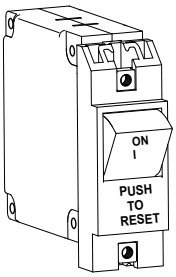

Handle position "OFF" guard with no actuate "OFF" feature (6th decision, X)

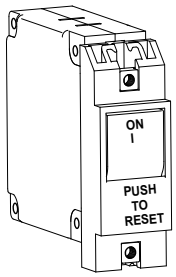

Handle position "ON" guard with no actuate "OFF" feature (6th decision, X)

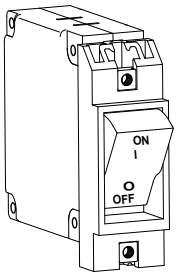

Handle position "OFF" without guard

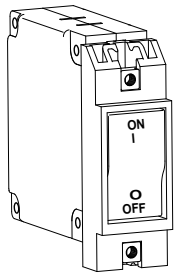

Handle position "ON" without guard

DETAIL "A"

Note: Access is limited to a device smaller than the Underwriters Laborator "articulated probe" Defined in UL-489 FIG. 11.1.7.2.1.

Copyright © 2020 Sensata Technologies, Inc.

SEALED TOGGLE CIRCUIT PROTECTORS (IAGN/IUGN)

The IAGN/IUGN family is a sealed toggle version of the IAG/IUG family. The silicone rubber seal around the handle assures panel seal integrity and makes this style a natural for harsh environments.

This sealed toggle family is available in one to three poles with ratings of .050 to 50 amperes.

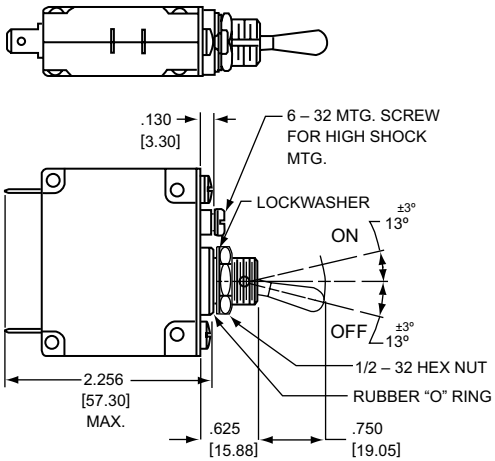

Single Pole

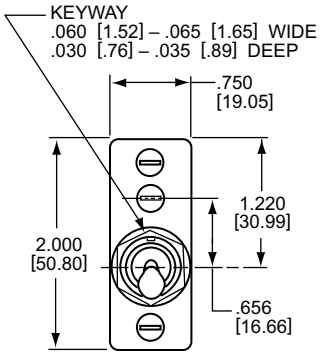

Two Pole

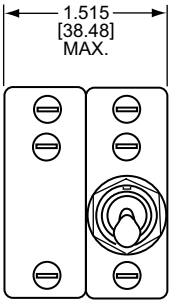

Three Pole

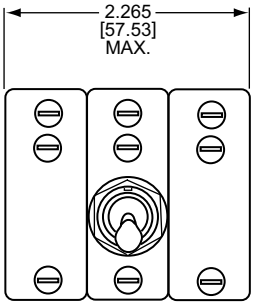

Mounting Detail Single Pole

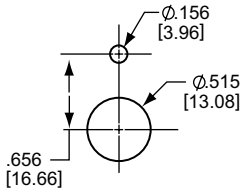

Two Pole*

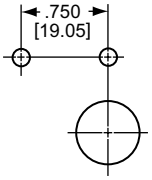

Three Pole*

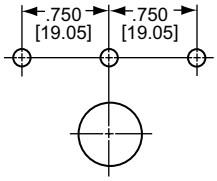

Optional Handle

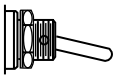

Panel Mounting Detail: Tolerance for Mtg. ±.005 [.13] unless noted.
*See Single Pole Mounting Detail for hole sizes and locations.

Note: Tolerance ± .015 [.38] unless noted. Dimensions in brackets [ ] are millimeters.

Copyright © 2020 Sensata Technologies, Inc.

SNAP-IN CIRCUIT PROTECTORS (IEGS/IEGHS/CEGS/CEGHS/LEGS/LEGHS)

The Snap-In version of the IEG brings mounting simplification and international spacing together in a package that is aesthetically enhanced. The IEGS securely snaps into a rectangular cut-out, eliminating the need for panel mounting hardware and the associated costs. The face plate of the IEGS is a clean, black matte and it satisfies the increasing demand for front panel components that are designed with ergonomic considerations.

The IEGS is offered in either flush or beveled versions, in 1, 2, 3 or 4 pole packages, and with a handle per pole or per unit.

The IEGS is UL Recognized, CSA Certified and TUV approved.

IEGHS/CEGHS/LEGHS Circuit Protectors (Note B)

(Multi-Pole-IEGH Handles Per Pole)
(Omit H for Single Pole)

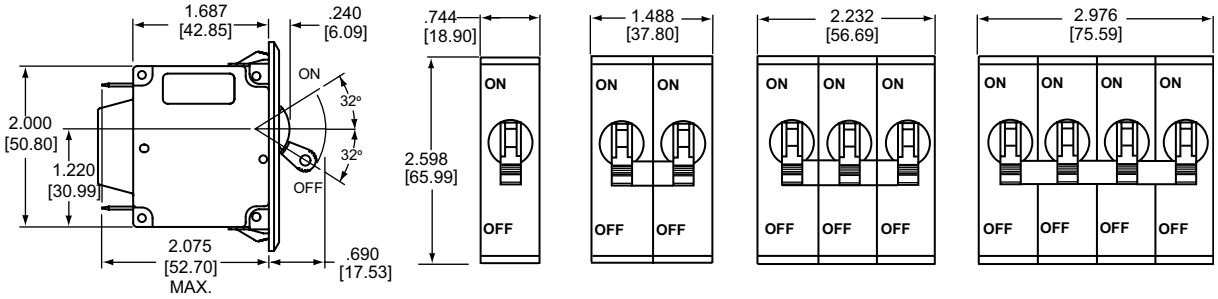

Panel Cutout Detail
Panel Thickness: (See Table)

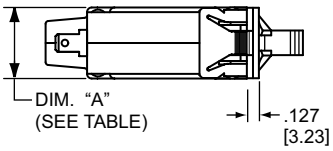

Note:
A: Flush face plate is optional. See decision tables, sixth decision.
B: Tolerance ± .031 [.79] Angles: ±5° unless noted. Dimensions in brackets [ ] are millimeters.

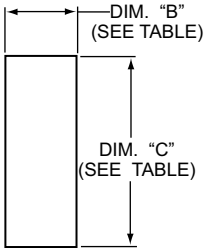

Dimensions "A", "B", "C"				
Number of Poles	**Dimension "A", inches [mm]**	**Dimension "B", inches [mm]**	**Dimension "C", inches [mm]**	
1 pole	.750 [19.05] max	.755 [19.18] min	2.180 ± .005 [55.37 ± .13]	2.186 ± .011 [55.52 ± .28]
2 pole	1.515 [38.48] max	1.520 [38.61] min		
3 pole	2.265 [57.53] max	2.270 [57.66] min		
4 pole	3.015 [76.58] max	3.020 [76.71] min		
		Panel Thickness	.040 to .059 [1.02 to 1.50]	.060 to .100 [1.52 to 2.54]

Copyright © 2020 Sensata Technologies, Inc.

IEGS/CEGS/LEGS Circuit Protectors (Note B)

(Add H for multiple handles per unit, IEGHS)

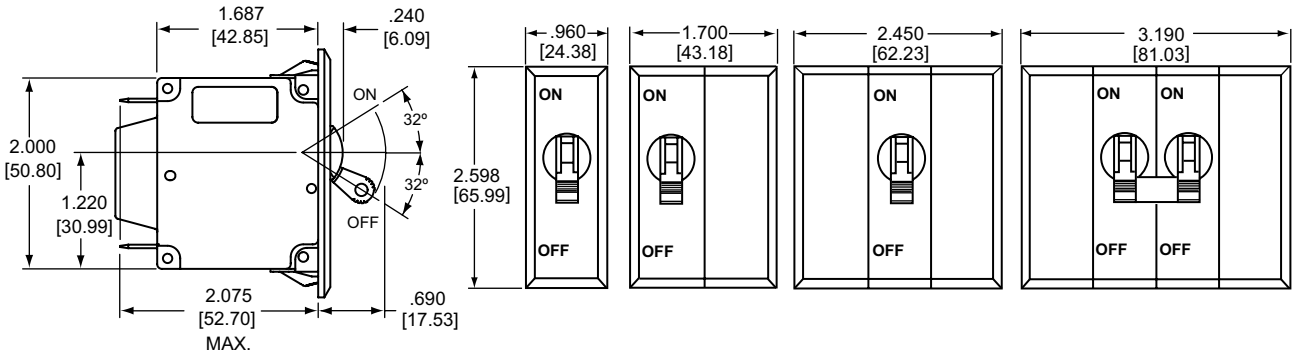

Panel Cutout Detail
Panel Thickness: (See Table)

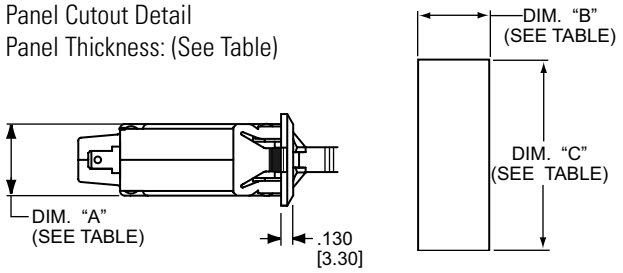

Dimensions "A", "B", "C"				
Number of Poles	**Dimension "A", inches [mm]**	**Dimension "B", inches [mm]**	**Dimension "C", inches [mm]**	
1 pole	.750 [19.05] max	.780 ± .015 [19.81 ± .381]	2.180 ± .005 [55.37 ± .13]	2.186 ± .011 [55.52 ± .28]
2 pole	1.515 [38.48] max	1.540 ± .015 [39.12 ± .381]		
3 pole	2.265 [57.53] max	2.290 ± .015 [58.17 ± .381]		
4 pole	3.015 [76.58] max	3.040 ± .015 [77.22 ± .381]		
		Panel Thickness	.040 to .059 [1.02 to 1.50]	.060 to .100 [1.52 to 2.54]

Optional Handle Guard

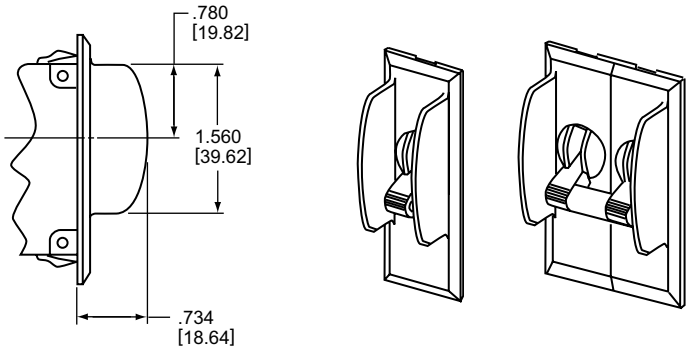

Note: A: Tolerance ± .015 [.38] unless noted. Dimensions in brackets [ ] are millimeters.
B: Bevelled face plate is standard.

Copyright © 2020 Sensata Technologies, Inc.

Series Trip

The most popular configuration for magnetic protectors is the series trip where the sensing coil and contacts are in series with the load being protected. The handle position conveniently indicates circuit status. In addition to providing conventional overcurrent protection, it's simultaneously used as an on-off switch.

Shunt Trip

The shunt trip is designed for controlling two separate loads with one assembly. The control is established by providing overload protection for the critical load. When the current through this load becomes excessive and reaches the trip point, the protector will open and remove power from both loads simultaneously. The total current rating of both loads must not exceed the maximum contact rating.

Auxiliary Switch (Applies to Series Trip Only)

This is furnished as an integral part of a series pole in single or multi-pole assemblies. Isolated electrically from the protector's circuit, the switch works in unison with the power contacts and provides indication at a remote location of the protector's on-off status.

Auxiliary switch contacts actuate simultaneously with the main protector contacts, and will open regardless of whether the protector contacts are opened manually or electrically. For auxiliary switch ratings below 6Vac or 5Vdc, an auxiliary switch with gold contacts designated as REG is available. Gold contacts are not recommended for load current above 100 milliamps.

Main Terminal Types					
Amp Rating	Push-On	8-32 Screw	M4 Screw	10-32 Screw	M5 Screw
.05 to 30	X	X	X		
30.1 to 50				X	X

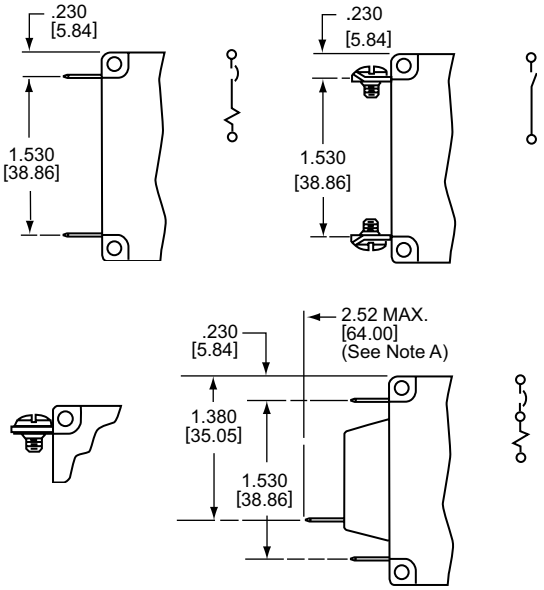

Standard Auxiliary Switch

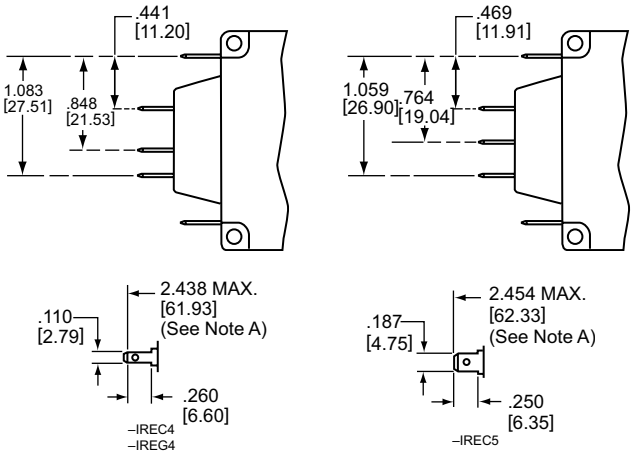

Series with Auxiliary Switch

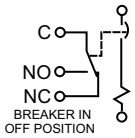

Note:

A: Terminal protrusion dimensions are referenced from back mounting panel.

B: Main terminals are male push-on type .250 [6.35] wide x 0.31 [.79] thick x .375 [9.53] long or 8-32 x .187 [4.75] screw type. Metric screw terminals are M4 x 5mm (<=30A): M5 x 5mm screw type (>30A). On TUV approved builds with screw terminals, external tooth lockwashers are supplied. On TUV approved builds with push-on terminals a soldered connection is required above 25 amperes.

Copyright © 2020 Sensata Technologies, Inc.

Relay Trip

This permits the overload sensing coil to be placed in a circuit which is electrically isolated from the trip contacts. The coil may be actuated by sensors monitoring pressure, flow, temperature, speed, etc. Other typical applications include crowbar, interlock and emergency /rapid shutdown circuitry. Trip may be accomplished by voltage or current, which must be removed after trip.

Dual Coil

By combining two electrically independent coils on a common magnetic circuit, it is possible to provide contact opening when either an over-current or trip voltage is applied to the respective coils. One coil will be a current trip coil with standard specifications. The second, or dual coil, can be used to provide a control function permitting contact opening from a remote interlock or other transducer functions. Standard coils are 6, 12, 24, 48, 120 and 240 volts. Tripping is instantaneous and must be removed (usually self-interrupting) after trip.

Voltage Trip

Sometimes called "dump circuits" or "panic trip circuits," these units make it possible to open main power contacts with lower power inputs from one or more sources. This configuration is becoming increasingly more important for sensitive circuitry and denser packaging in automation systems. Available in series, shunt or relay configurations.

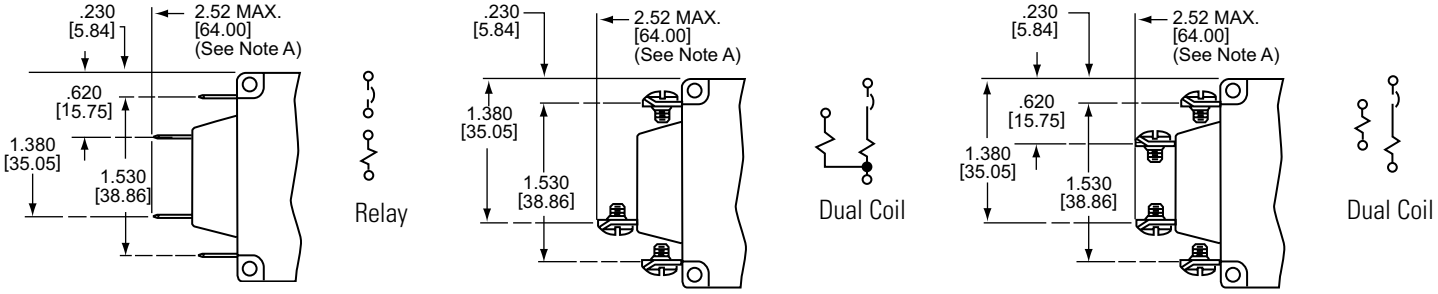

Optional Barriers (IEG Only)

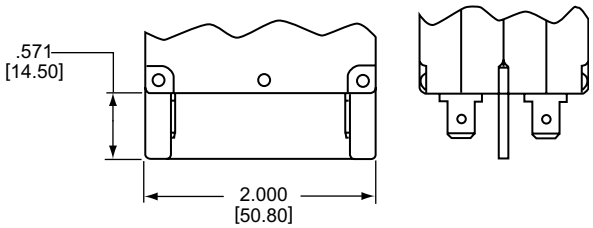

Note: Tolerance ± .015 [.38] unless noted.
Dimensions in brackets [ ] are millimeters.

Copyright © 2020 Sensata Technologies, Inc.

Inrush Pulse Tolerance

The following table provides a comparison of inrush pulse tolerance with and without the inertial delay feature for each of the 50/60Hz delays. Pulse tolerance is defined as a single pulse of half sine wave peak current amplitude of 8 milliseconds duration that will not trip the circuit breaker. The table at left provides a guide to determine if the inertia delay feature is required. Consult factory for further assistance.

Inrush Pulse Tolerance	
Delay	**Pulse Tolerance**
61, 62, 63, 71, 72, 73	10 times rated current (approx)
61F, 62F, 63F, 71F, 72F, 73F	12 times rated current (approx)
64, 65, 66	25 times rated current (approx)

Typical Resistance / Impedance			
Current Ratings (Amps)	**Impedance**		
	DC (ohms)	**AC, 50/60Hz (ohms)**	**AC, 400Hz (ohms)**
	51, 52, 53, 59	***61, 62, 63, 69***	***41, 42, 43, 49***
0.200	45.8	28.5	71.94
1.00	1.38	1.10	2.85
2.00	0.371	0.29	0.76
5.00	0.055	0.051	0.12
10.0	0.017	0.016	0.032
20.0	0.006	0.006	0.010
30.0	0.003	0.004	0.006
50.0	0.0019	0.0018	—

DCR and Impedance based on 100% rated current applied and stabilized for a minimum of one hour. Tolerance .05-2.5 amperes ± 20%: 2.6 -20 amperes ± 25%, 21-50 amperes ± 50%. Consult factory for special values and for coil impedance of delays not shown.

Copyright © 2020 Sensata Technologies, Inc.

OPERATING CHARACTERISTICS (CONTINUED)

Percentage of Rated Current vs Trip Time in Seconds								
Delay	**100%**	**125%**	**150%**	**200%**	**400%**	**600%**	**800%**	**1000%**
41	No Trip	May Trip	.500 to 8.0	.150 to 1.9	.020 to .40	.006 to .25	.004 to .1	.004 to .05
42	No Trip	May Trip	5 to 70	2.2 to 25	.40 to 5.0	.012 to 2	.006 to .2	.006 to .15
43	No Trip	May Trip	35 to 350	12 to 120	1.5 to 20	.012 to 2.2	.01 to .22	.01 to .1
49	No Trip	May Trip	.100 Max	.050 Max	.020 Max	.020 Max	.020 Max	.020 Max
51*	No Trip	.500 to 6.5	.300 to 3.0	.100 to 1.2	.031 to .500	.011 to .25	.004 to .1	.004 to .08
52*	No Trip	2 to 60	1.8 to 30	1 to 10	.15 to 2.0	.015 to 1	.008 to .5	.006 to .1
53*	No Trip	80 to 700	40 to 400	15 to 150	2 to 20	.015 to 9	.015 to .55	.012 to .2
59*	No Trip	.120 Max	.100 Max	.050 Max	.022 Max	.017 Max	.017 Max	.017 Max
61*	No Trip	.700 to 12	.35 to 7.0	.130 to 3.0	.030 to 1	.015 to .3	.01 to .15	.008 to .1
62*	No Trip	10 to 120	6 to 60	2 to 20	.2 to 3.0	.015 to 2	.015 to .8	.01 to .25
63*	No Trip	50 to 700	30 to 400	10 to 150	1.5 to 20	.015 to 10	.013 to .85	.013 to .5
64	No Trip	.7 to 12	.35 to 7	.13 to 3	.030 to 1	.017 to .3	.01 to .16	.008 to .1
65	No Trip	10 to 120	6 to 60	2 to 20	.2 to 3	.02 to 2	.017 to .76	.01 to. 6
66	No Trip	50 to 700	30 to 400	10 to 150	1.5 to 20	.4 to 10	.014 to 5	.014 to 3
69*	No Trip	.120 Max	.100 Max	.050 Max	.022 Max	.017 Max	.017 Max	.017 Max
71**	No Trip	.440 to 10	.300 to 7	.100 to 3.0	.03 to 1	.012 to .3	.004 to .15	.004 to .1
72**	No Trip	1.8 to 100	1.7 to 60	1 to 20	.15 to 3	.015 to 2	.008 to .79	.006 to .28
73**	No Trip	50 to 600	30 to 400	10 to 150	1.8 to 20	.015 to 10	.015 to .88	.011 to .50
79**	No Trip	.120 Max	.100 Max	.050 Max	.023 Max	.016 Max	.015 Max	.015 Max

*CEG type units are available only with 51, 52, ,53 and 59 delays LEG type units are available only with 61, 62, 63 and 69 delays
**135% minimum trip point for delays 71, 72, 73 and 79

Copyright © 2020 Sensata Technologies, Inc.

400Hz, DC, 50/60Hz Delay Curves (typ)

A choice of delays is offered for DC, 50/60Hz and 400Hz applications. Delays 49, 59 and 69 provide fast acting, instantaneous trip and are often used to protect sensitive electronic equipment (not recommended where known inrush exists). Delays 41, 51 and 61 have a short delay for general purpose applications. Delays 42, 52 and 62 are long enough to start certain types of motors and most transformer and capacitor loads. Delays 43, 53 and 63 are long delays for special motor applications at 400Hz, DC and 60Hz. CEG type units are only available in 51, 52, 53 and 59 delay curves. LEG type units are only available in 61, 62, 63 and 69 delay curves.

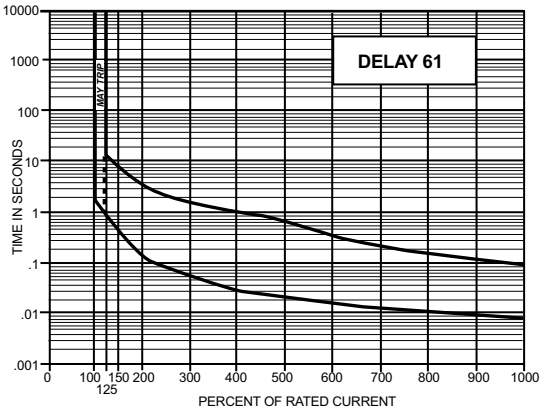

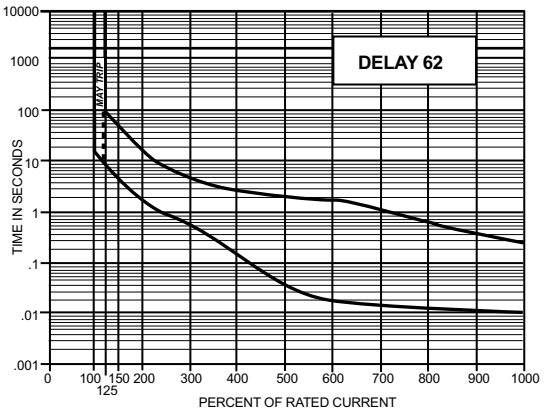

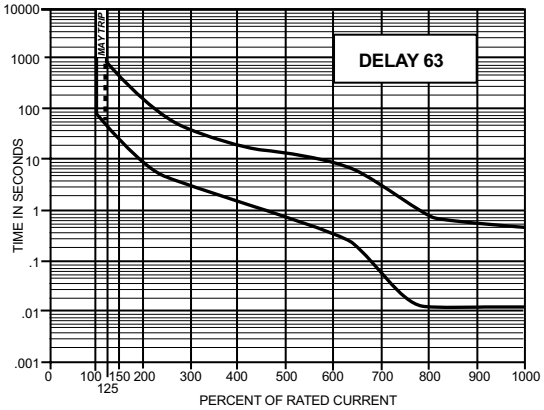

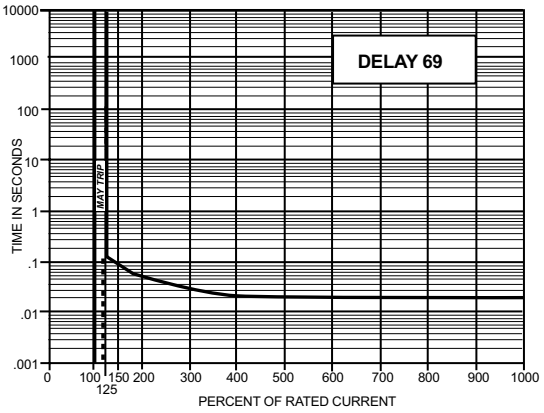

Copyright © 2020 Sensata Technologies, Inc.

DC Delay Curves (typ)

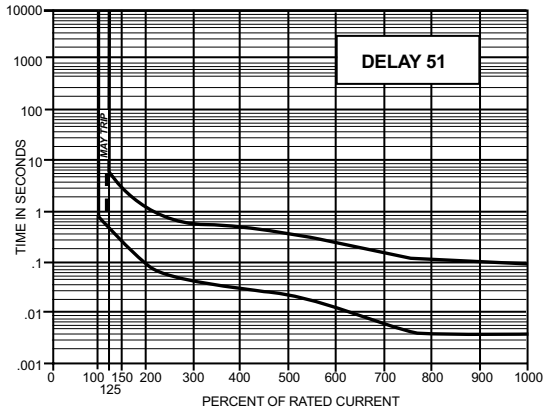

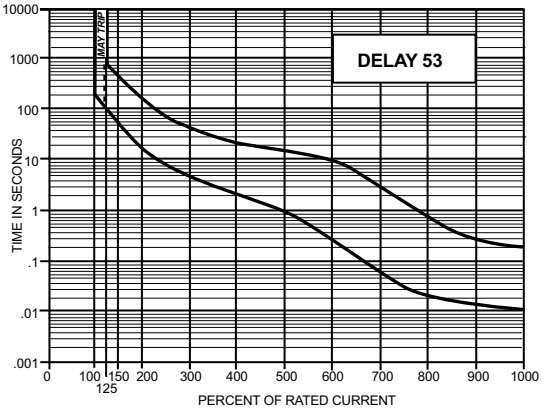

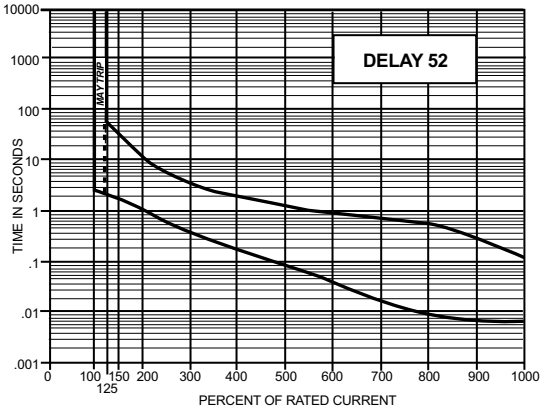

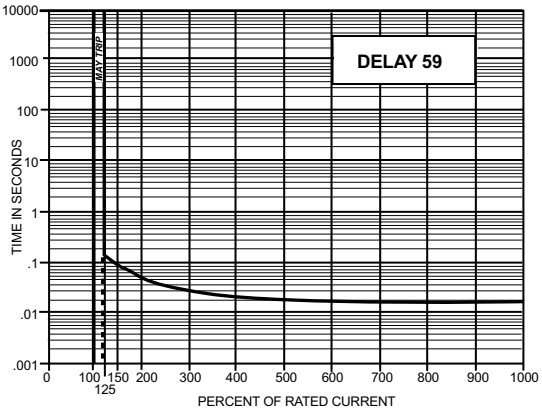

Copyright © 2020 Sensata Technologies, Inc.

Multi-frequency - DC, 50/60Hz Delay Curves (typ)

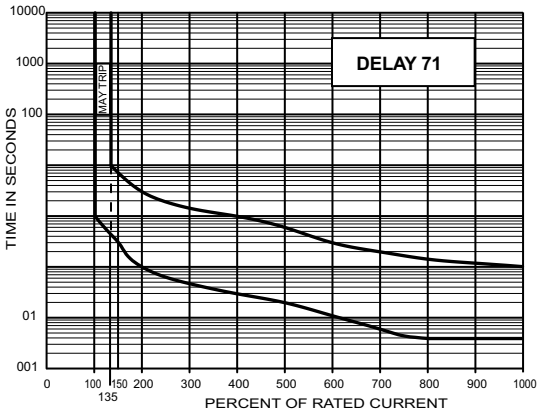

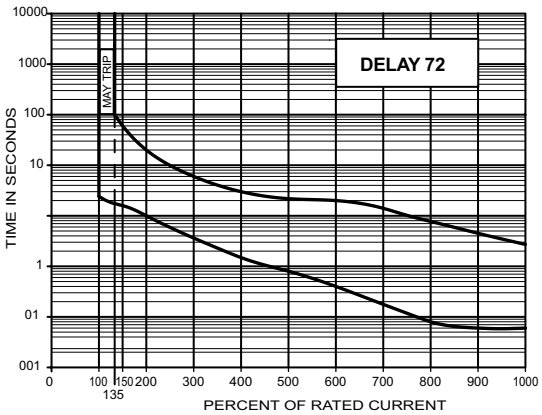

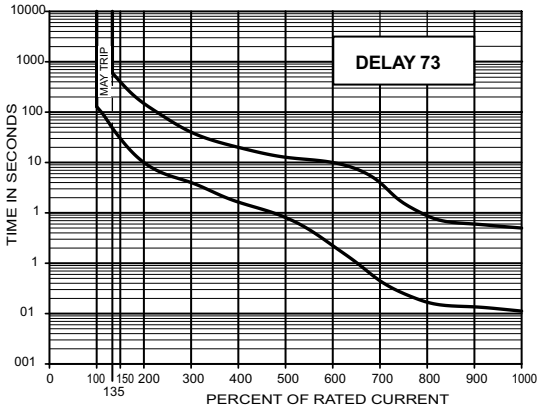

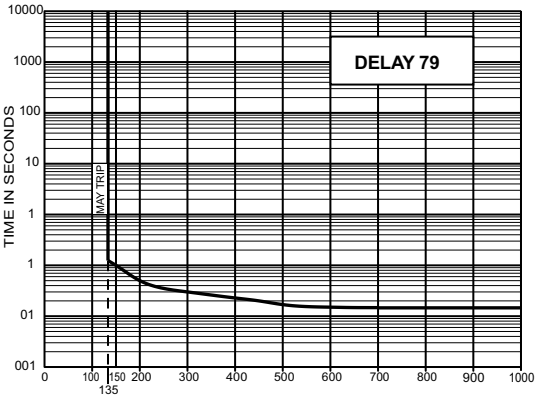

Copyright © 2020 Sensata Technologies, Inc.

400Hz Delay Curves (typ)

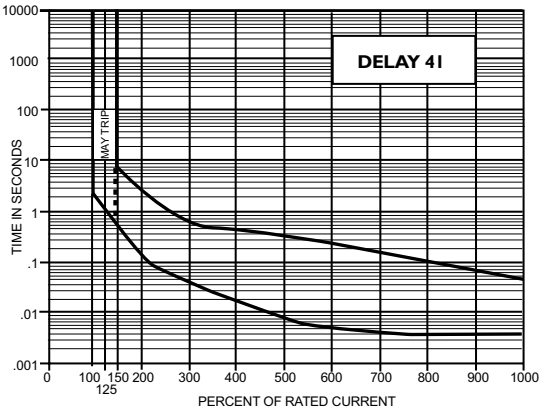

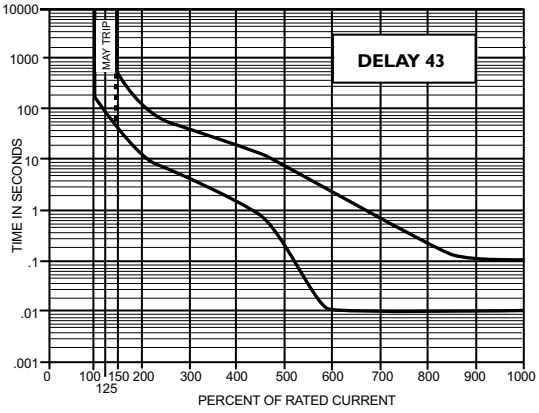

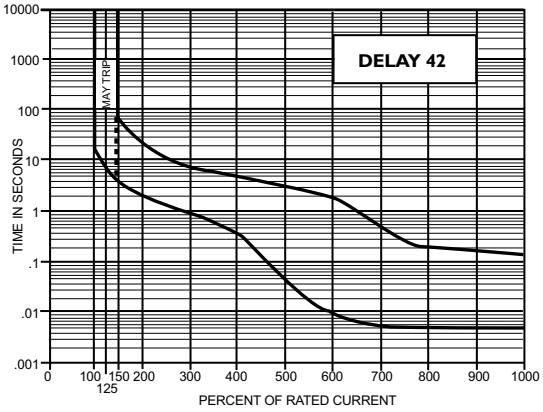

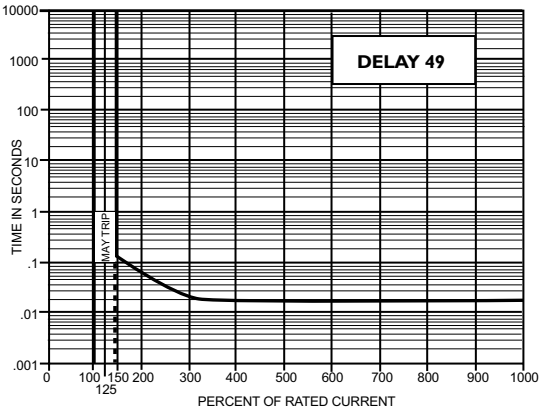

Copyright © 2020 Sensata Technologies, Inc.

Trip Free

Will trip open on overload, even when forcibly held in the ON position. This prevents the operator from damaging the circuit by holding on the protector.

Trip Indication

The operating handle moves positively to the OFF position on overload.

Ambient Operation

IAG/IUG/IEG/CEG/LEG protectors operate in temperatures between –40° C to +85° C.

Insulation Resistance

Not less than 100 megohms at 500 volts DC.

Dielectric Strength

IAG/IUG/IEG/CEG/LEG protectors withstand 3750Vac, 60Hz for 60 seconds between all electrically isolated terminals, except auxiliary switch terminals shall withstand 600Vac, 60Hz for REG and REC types. Four terminal dual coil and relay construction (not offered in the IEG) will withstand 1500Vac.

Endurance

Operating as a switch, the operating life exceeds 10,000 operations at a rate of 6 per minute when tested as follows: 6000 OPS @ rated current plus 4000 OPS @ at no load.

Electrical Characteristics

.050-50 amperes; 80Vdc Max., 240Vac Max., 50/60Hz and .050-30 amperes: 250Vac Max., 400Hz. Units above 30 amps are not suitable for across-the-line motor starting.

Auxiliary Switch

When supplied shall be SPDT configuration. Non VDE approved switches have a maximum UL rating of 10.0 amperes, 250 volts, 60Hz; 3.0 amperes, 50 volts DC, 1 amperes, 80 volts DC (REC) type or 0.1 amperes, 125 volts, 60Hz. (REG type).

TUV approved switches have a maximum UL rating of 1.0 amperes, 125 volts, 60Hz, 1 amperes, 80 volts DC, or 0.1 amperes, 125 volts, 60Hz (REG type); or 0.1 amperes, 125 volts, 60Hz (REG type).

Vibration

Circuit protector shall not trip when vibrated per MIL-STD-202, Method 204, Test Condition A with 100% rated current applied to delayed units and 80% rated current to instantaneous units.

Approximate Weight Per Pole (1 to 6 poles available)	
Ounces	**Grams**
2.2	62.4

Recommended Torque Specifications	
Component	**Torque (in-lbs)**
6-32 Mounting Inserts	6 to 8
M3 Mounting Screws	4 to 5
8-32 Screw Terminals	10 to 12
M4 Terminal Screws	10 to 12
10-32 Screw Terminals	14 to 15
M5 Screw Terminals	14 to 15
1/2 - 32 Mounting Bushing	30 to 35
Where applicable, mechanical support must be provide to the terminals when applying torque	

Copyright © 2020 Sensata Technologies, Inc.

IAG/IUG/IEG/CEG ORDERING OPTIONS

The ordering code for IAG/IUG/IEG/CEG/IDG circuit protectors may be determined by following the decision steps in the tables shown here.

The coding given permits a self-assigning part number but with certain limitations. Special applications may require a factory-assigned part number. Typical examples are units with mixed ratings, combinations of styles, or constructions not listed in the third decision table. With these, it is suggested that order entry be by description and/or drawings and a part number will be established. Additionally, it is standard policy to establish a factory-assigned part number whenever a descriptive drawing exists to provide cross reference, traceability and manufacturing control.

When specifying a circuit protector for AC motor start or high inrush applications, the peak amplitude and surge duration should be specified for factory assistance in rating selection.

For example, the following is the code for a single pole, IEG quick-connect type terminal, series unit with auxiliary switch, designed for operation in a 50/60Hz circuit. It has a short time delay, a rating of 20 amperes, a black marked handle and is TUV approved.

To determine the ordering number for your particular IAG/IUG/IEG/CEG unit, simply follow the steps shown. You may use this number to place an order or as a reference for further questions you may have.

Notes

A. It is recommended that power leads be soldered to circuit protectors having push-on type terminals for current trip ratings above 20 amperes.

B. When "A" (metric thread mounting) is specified in the sixth decision in combination with screw terminal option in the second decision, metric screw terminals are supplied.

C. IEG, IEGH, IEGS, IEGHS, IEGZX and IEGBK circuit protectors are designed to meet 8mm creepage and clearance requirements for installation Category III, Pollution Degree 3, Case A as measured in IEC 664. Intended for use in equipment designed to comply with IEC 601 and 950 and IEC 60947-2.

Copyright © 2020 Sensata Technologies, Inc.

IEG	1	–	1REC4	–	61	–	20.0		–	01	–	V

1. Type & Terminal				2. Poles & Terminals			Options 3-7
Type/Description		**Handle and Mounting Options**		**Push-on Terminals**	**Screw Terminals**		*See next page*
IAG **IUG*** **IEG**** **CUG+** **CEG++**	One toggle handle per unit		Standard toggle/ mounting, no designation required	**1**	**6**	Single pole	
IAGH **IUGH*** **IEGH**** **CUGH+** **CEGH++**	One toggle handle per pole	**S**	Toggle w/ snap-in mounting	**11**	**66**	Two pole	
IDG* **	One toggle handle per unit, marine ignition protection	**ZX**	ZX Rocker w/ integral mounting*	**111**	**666**	Three pole	
IDGH* **	One toggle handle per pole marine ignition protection	**BX**	BX Rocker w/ integral mounting	**1111**	**6666**	Four pole	
IMG** **CMG++**	One toggle handle per unit mid-trip indication	**N**	Sealed toggle w/bushing mounting**	**Not available in toggle seal handle type.*			
IMGH** **CMGH++**	One toggle handle per pole mid-trip indication						
UL Recognized, CSA Certified* ***UL Recognized, CSA Certified, TUV Approved* ** UL Recognized UL1500* *+ UL489A Listed CSA Certified* *++ UL489AListed CSA Certified TUV Approved*		*Note: Add "F" for flat screw terminals* ** Not available on mid-trip units* *** Available only on IAG, IUG units*					

Copyright © 2020 Sensata Technologies, Inc.

3. Internal Configuration		4. Frequency & Delay		5. Rated Current		6. Optional		7. Handle Color & Marking Selection	TUV / CCC	
-0	Switch Only	**SW**	Switch only	Standard ratings listed. For other ratings, please contact the factory.			Standard hardware. No designation required.	*See next page*	**V,T**	**TUV and CCC Approved** The shaded areas denote TUV and CCC (if applicable) approval options. This approval requires the addition of a V or T at the end of the part number. The Suffix will be added to any part number formed entirely from shaded decisions. If non-shaded areas are selected, the unit will not be TUV or CCC Approved, but other approvals still apply.
-1	Series	**-41**	400Hz short delay			**-A**	Metric thread mounting inserts and terminals			
		-42	400Hz long delay							
-1REC4	Series w/ auxiliary switch * .110 quick connect	**-43**	400Hz motor start	**.100**	10.0	**-B**	Barriers*			
		-49	400Hz 150% instant trip			**-C**	277V (50/60Hz only) (See note 3)			
		-51	DC short delay*	**.250**	15.0					
-1REC5	Series w/ auxiliary switch * .187 quick connect	**-52**	DC long delay*							
		-53	DC motor start*	**.500**	20.0	**-G**	Handle guard, (available in ZX, BX and snap-in versions only)			
		-59	DC 125% instant trip*							
-1REG4	Series w/ auxiliary switch (gold contacts)* .110 quick connect	**-61**	50/60Hz short delay	**.750**	30.0	**-L**	Handle lock			
		-62	50/60Hz long delay			**-M**	Handle in opposite pole (2 pole only)			
		-63	50/60Hz motor start	**1.00**	35.0*					
-1RS4	Series w/ alarm switch, electrical trip, .110 Q.C. terminals	**-64**	50/60Hz short delay	**2.50**	40.0*	**-Q**	APG style "FAT" handle			
		-65	50/60Hz long delay							
		-66	50/60Hz motor start	**5.00**	50.0*	**-S**	Face plate sides flush with protector (see note 4)			
		-69	50/60Hz 125% instant trip							
-1RLS4	Series w/ alarm switch, electrical trip, .110 Q.C. terminals (mid-trip only)	**-71**	DC/60Hz short delay	**7.50**					**C**	**CCC Approved** This approval requires the addition of a C at the end of the part number. The unit will not be TUV Approved.
		-72	DC/60Hz long delay							
		-73	DC/60Hz motor start			**-X**	Handle guard with no actuation feature (BX rocker only) (Not available with mid-trip indication)			
-3	Shunt	**-79**	DC/60 Hz 135% instant trip							
-4	Relay	*For addition of inertial delay, add an ìFî to any delay numeral.* ** CEG types are only available with DC ratings*		** IDG/IDGH is rated for 30 amps max.*		*Notes:* *1. One or more descriptions may be used as required.* *2. When this is not used, table one may be substituted and U.S. thread will be supplied. Unit will be rated at 250V (50/60Hz only.)* *3. TUV approved at 250VAC* *4. IEGS standard face plate has beveled sides(see pg.90)* ** Not available on snap-in units*				
** Only one auxiliary switch is normally supplied on two or three pole units. Switch is located in the right-hand pole (viewed from terminal end) unless otherwise specified.*										

Copyright © 2020 Sensata Technologies, Inc.

7. Handle Color & Marking Selection	
Color	**Marked ON-OFF I-O**
Black	-01 (STD)
Yellow	-11
Red	-21
White	-91
Handle marking color is white on black, red, blue & green handles and black on white, yellow and orange handles. See alternate 7th decision below for X, ZX & BZ rocker handles.	

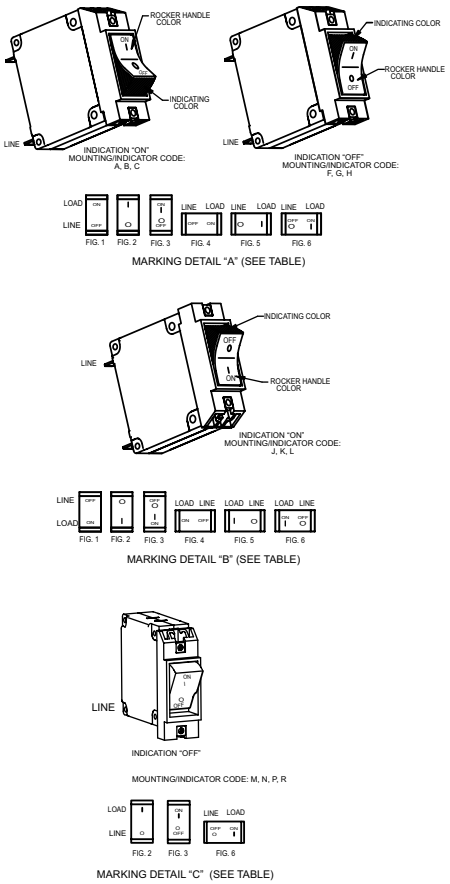

7. Rocker Handle Color, Indicator Color and Marking Selection (See Note)						
IAGZX, IUGZX, IEGZX, CUGZX, CEGZX Rocker Handle (Single Rocker Color)						
				Vertical Mounting	**Horizontal Mounting**	
Rocker Handle Color	**Indicating Color**	**Marking Color**	**Indicates:**	**On-Off I-O Fig.3**	**On-Off I-O Fig.6**	**Marking Detail**
Black	N/A	White	N/A	-03	-06	**A**
Red	N/A	White	N/A	-23	-26	
Grey	N/A	Black	N/A	-43	-46	
Orange	N/A	Black	N/A	-53	-56	
White	N/A	Black	N/A	-93	-96	
IAGZX, IUGZX, IEGZX, CUGZX, CEGZX Rocker Handle (Dual Rocker Color)						
Black	White	White	On	-A3	-A6	**A**
Black	Red	White	On	-B3	-B6	
Black	Green	White	On	-C3	-C6	
Black	White	White	Off	-F3	-F6	
Black	Red	White	Off	-G3	-G6	
Black	Green	White	Off	-H3	-H6	
Black	White	White	On	-J3	-J6	**B**
Black	Red	White	On	-K3	-K6	
Black	Green	White	On	-L3	-L6	
IAGBX, IUGBX, IEGBX, CUGBX, CEGBX Rocker Handle (Dual Rocker Color)						
Black	White	White	Off	-M3	-M6	**C**
Black	Red	Red	Off	-N3	-N6	
Black	Green	Green	Off	-P3	-P6	
Black	Yellow	Yellow	Off	-R3	-R6	
Notes: A. Bezels of IAGBX, IUGBX, IEGBX, CUGBX, CEGBX are black. *B. Consult factory for other marking options.*						

Copyright © 2020 Sensata Technologies, Inc.

LEG ORDERING OPTIONS

The ordering code for LEG circuit breakers may be determined by following the decision steps in the tables shown here.

The coding given permits a self-assigning part number but with certain limitations. Special applications may require a factory-assigned part number. Typical examples are units with mixed ratings, combinations of styles, or constructions not listed in the third decision table. With these, it is suggested that order entry be by description and/or drawings and a part number will be established. Additionally, it is standard policy to establish a factory-assigned part number whenever a descriptive drawing exists to provide cross reference, traceability and manufacturing control.

When specifying a circuit breaker for AC motor start or high inrush applications, the peak amplitude and surge duration should be specified for factory assistance in rating selection.

For example, the following is the code for a single pole, LEG screw type terminal, series unit with auxiliary switch, designed for operation in a 50/60Hz circuit. It has a short time delay, a rating of 20 amperes, a black marked handle and is TUV approved.

To determine the ordering number for your particular LEG unit, simply follow the steps shown. You may use this number to place an order or as a reference for further questions you may have.

Notes

A. When "A" (metric thread mounting) is specified in the sixth decision in combination with screw terminal option in the second decision, metric screw terminals are supplied.

B. LEG, LEGH, LEGS, LEGHS, LEGZX and LEGBX circuit breakers are designed to meet 8mm creepage and clearance requirements for installation Category III, Pollution Degree 3, Case A as measured in IEC 664. Intended for use in equipment designed to comply with IEC 601 and 950 and IEC 60947-2.

Example : LEG6-1REC4-61-20.0-01-V

LEG 6 – 1REC4 – 61 – 20.0 ___ – 01 – V

1. Type & Terminal			
LEG	One toggle handle per unit		Standard toggle/ mounting, no designation required
LMG	One toggle handle per unit mid-trip indication	**S**	Toggle w/ snap-in mounting
LEGH	One toggle handle per pole	**ZX**	ZX Rocker w/ integral mounting*
LMGH	One toggle handle per pole mid-trip indication	**BX**	BX Rocker w/ integral mounting
Note: All types are UL489 listed, CUL certified		*Note: Add "F" for flat screw terminals* ** Not available on mid-trip units*	

2. Poles & Terminals		
Push-on Terminals	**Screw Terminals**	
1	**6**	Single pole
11	**66**	Two pole
**Not available in toggle seal handle type.*		

Options 3-8
See next page

Copyright © 2020 Sensata Technologies, Inc.

3. Internal Configuration		4. Frequency & Delay		5. Rated Current	6. Optional		7. Handle Color & Marking Selection	TUV / CCC	
-1	**Series**	**-61**	50/60Hz short delay	Use three numbers to print required current value between .100 amps minimum and 30.0 amps maximum. For example, use: .100 or 2.00 or 10.0		Standard hardware. No designation required.	*See next page*	**V,T**	**TUV Approved** The shaded areas denote TUV approval options. This approval requires the addition of a V or a T at the end of the part number. The Suffix will be added to any part number formed entirely from shaded decisions. If non-shaded areas are selected, the unit will not be TUV Approved, but other approvals still apply.
-1REC4	Series w/ auxiliary switch * .110 quick connect				**-A**	Metric thread mounting inserts and terminals			
-1REC5	Series w/ auxiliary switch * .187 quick connect								
-1REG4	Series w/ auxiliary switch* (gold contacts) .110 quick connect	**-62**	50/60Hz long delay		**-G**	Handle guard, (available in ZX, BX and snap-in versions only)			
-1RS4	Series w/ alarm switch*, electrical trip, .110 Q.C. terminals	**-63**	50/60Hz motor start		**-L**	Handle lock			
-1RLS4	Series w/ alarm switch*, electrical trip, mid-trip only, .110 Q.C. terminals				**-S**	Face plate sides flush with breaker			
-3	Shunt	**-69**	50/60Hz 125% instant trip		**-X***	Handle guard with no actuation feature (BX rocker only)		**C**	**CCC Approved** This approval requires the addition of a C at the end of the part number. The unit will not be TUV Approved.
** Only one auxiliary switch is normally supplied on two pole units. Switch is located in the right-hand pole (viewed from terminal end) unless otherwise specified.*		*For addition of inertial delay, add an "F" to any delay numeral. (Not available on units rated at 125VAC).* ** CEG types are only available with DC ratings*			**-Z**	"Z" Barriers			
					Notes: *1. One or more descriptions may be used as required.* *2. When this is not used, table one may be substituted and U.S. thread will be supplied. Unit will be rated at 250V (50/60Hz only.)* *3. LEGS standard face plate has beveled sides(see pg. 90)* ** Not available on mid-trip units*				

Copyright © 2020 Sensata Technologies, Inc.

7. Handle Color & Marking Selection	
Color	**Marked ON-OFF I-O**
Black	-01 (STD)
Yellow	-11
Red	-21
White	-91
Handle marking color is white on black, red, blue & green handles and black on white, yellow and orange handles. See alternate 7th decision below for ZX & BZ rocker handles.	

7. Rocker Handle Color, Indicator Color and Marking Selection (See Note)						
LEGZX Rocker Handle (Single Rocker Color)						
				Vertical Mounting	**Horizontal Mounting**	
Rocker Handle Color	**Indicating Color**	**Marking Color**	**Indicates:**	**On-Off I-O Fig.3**	**On-Off I-O Fig.6**	**Marking Detail**
Black	N/A	White	N/A	-03	-06	**A**
Red	N/A	White	N/A	-23	-26	
Grey	N/A	Black	N/A	-43	-46	
Orange	N/A	Black	N/A	-53	-56	
White	N/A	Black	N/A	-93	-96	
LEGZX Rocker Handle (Dual Rocker Color)						
Black	White	White	On	-A3	-A6	**A**
Black	Red	White	On	-B3	-B6	
Black	Green	White	On	-C3	-C6	
Black	White	White	Off	-F3	-F6	
Black	Red	White	Off	-G3	-G6	
Black	Green	White	Off	-H3	-H6	
Black	White	White	On	-J3	-J6	**B**
Black	Red	White	On	-K3	-K6	
Black	Green	White	On	-L3	-L6	
LEGBX Rocker Handle (Dual Rocker Color)						
Black	White	White	Off	-M3	-M6	**C**
Black	Red	Red	Off	-N3	-N6	
Black	Green	Green	Off	-P3	-P6	
Black	Yellow	Yellow	Off	-R3	-R6	
Notes: A. Bezels of LEGBX are black. *B. Consult factory for other marking options.*						

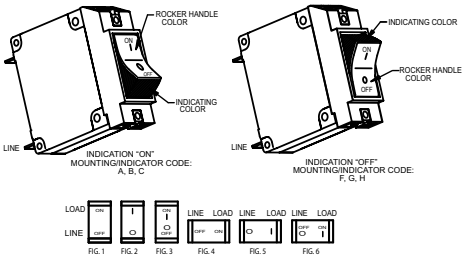

MARKING DETAIL "A"

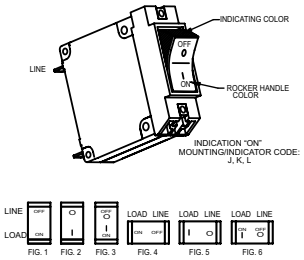

MARKING DETAIL "B"

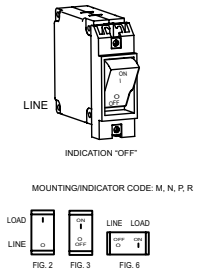

MARKING DETAIL "C"

Copyright © 2020 Sensata Technologies, Inc.

IAG/IUG/IEG Supplementary Protectors				Rated Current (Amps)		Short Circuit Rating (SC), Amps	
Max Voltage	**Frequency (Hz)**	**Phase**	**Minimum Poles**	**UL/CSA**	**TÜV**	**UL1077 & CSA**	**TÜV**
80	DC	—	1	.02 to 50	.10 to 30	U2, 7500	5000
125	50/60	1	1	.02 to 50	—	U2, 3000	—
125	50/60	1	1	.02 to 30	—	C1, 5000(3)	—
125	50/60	1	1	.02 to 50	—	U3, 1000	—
125 / 250	50/60	1	2	.02 to 50	—	U1, 3000	—
125 / 250	50/60	1	1	2/1 - 30/15	—	C2, 5000(1)	—
240	50/60	1 & 3	1	.02 to 50	—	U1, 2000	—
240	50/60	1 & 3	1	.02 to 50	—	C2, 5000(1)	—
250	50/60	1	1	.02 to 2	—	U2, 5000	—
250	50/60	1 & 3	1	.02 to 30	.10 to 50	U1, 2000	2000
250	50/60	1 & 3	1	.02 to 30	—	C2, 3500(2)	—
250 (4)	50/60	1 & 3	1	.02 to 30	—	C1, 3500(2)	—
250 (4)	50/60	1 & 3	1	.02 to 30	—	U1, 1000	—
250 (5)	50/60	1	2	.02 to 50	—	U3, 1000	—
250 (5)	50/60	3	3	.02 to 50	—	U3, 1000	—
277	50/60	1	1	.02 to 30	—	U2, 2000	—
277	50/60	1	1	.02 to 30	—	C2, 5000(2)	—v
250	400	1 & 3	1	.02 to 30	—	U2, 1500	—
250	400	3	—	.02 to 30	—	U3, 200	—
IDG Supplementary Protectors							
Max Voltage	**Frequency (Hz)**	**Phase**	**Minimum Poles**	**UL/CSA**	**TÜV**	**UL1077 & CSA**	**TÜV**
48	DC	—	1	.02-50	—	U2, 5000	—
65	DC	—	1	.02-50	—	U2, 3000	—
125	50/60	1	1	.02-50	—	U2, 2000	—
125/250	50/60	1	2	.02-50	—	U2, 1500	—
250	50/60	1 & 3	1	.02-30	—	U1, 1000	—
CEG Communications Equipment Circuit Breakers							
Max Voltage	**Frequency (Hz)**	**Phase**	**Minimum Poles**	**UL/CSA**	**TÜV**	**UL489A**	**TÜV**
80	DC	—	1	.05-15	1-50	5000	5000
LEG Circuit Breakers							
Max Voltage	**Frequency (Hz)**	**Phase**	**Minimum Poles**	**UL/CSA**	**TÜV**	**UL489**	**TÜV**
125	50/60	1	1	.05-30	1-30	5000	5000
120/240	50/60	1	2	1-30	1-30	5000	5000

Notes: (1) With 125 A max. series fuse; (2) With 80 A max. series fuse; (3) With 50 A max. circuit breaker; (4) With blocked vent construction; (5) Non-standard construction. "Fit for further use" approval

Copyright © 2020 Sensata Technologies, Inc.

General notes:
All supplementary protectors are of the overcurrent (OC) type
The family of protectors has been evaluated for end use application for use groups (UG) A, B, C and D
The terminals (FW) are suitable for factory wiring only (0)
The maximum voltage ratings for which the protectors have been tested are shown in the chart
The current is the amperage range that the protectors have been tested
The tripping current (TC) for all of the protectors is "1" (in the range of 125% to 135% of ampere rating except for the 400Hz protectors which is "2" (more than 135% of ampere rating)
The overload rating (OL) - designates whether the protector has been tested for general use or motor starting applications.

0 – tested at 1.5 times amp rating for general use
1 – tested at 6 times AC rating or 10 times DC rating for motor starting

The short circuit current rating (SC) – The short circuit rating in amperes following a letter and number designating the test conditions and any calibration following the short circuit test is defined below:

C – Indicates short circuit test was conducted with series overcurrent protection
U – Indicates short circuit test was conducted without series overcurrent protection
1 – Indicates a recalibration was not conducted as part of the short circuit testing
2 – Indicates a recalibration was performed as part of the short circuit testing
3 – Indicates recalibration was performed along with the dielectric and voltage withstand for "Suitable for Further Use" rating

WARNINGS

RISK OF MATERIAL DAMAGE AND HOT ENCLOSURE
- The product's side panels may be hot, allow the product to cool before touching
- Follow proper mounting instructions including torque values
- Do not allow liquids or foreign objects to enter this product

Failure to follow these instructions can result in serious injury, or equipment damage.

HAZARD OF ELECTRIC SHOCK, EXPLOSION OR ARC FLASH
- Disconnect all power before installing or working with this equipment
- Verify all connections and replace all covers before turning on power

Failure to follow these instructions can result in death or serious injury.

Sensata Technologies, Inc. ("Sensata") data sheets are solely intended to assist designers ("Buyers") who are developing systems that incorporate Sensata products (also referred to herein as "components"). Buyer understands and agrees that Buyer remains responsible for using its independent analysis, evaluation and judgment in designing Buyer's systems and products. Sensata data sheets have been created using standard laboratory conditions and engineering practices. Sensata has not conducted any testing other than that specifically described in the published documentation for a particular data sheet. Sensata may make corrections, enhancements, improvements and other changes to its data sheets or components without notice.
Buyers are authorized to use Sensata data sheets with the Sensata component(s) identified in each particular data sheet. HOWEVER, NO OTHER LICENSE, EXPRESS OR IMPLIED, BY ESTOPPEL OR OTHERWISE TO ANY OTHER SENSATA INTELLECTUAL PROPERTY RIGHT, AND NO LICENSE TO ANY THIRD PARTY TECHNOLOGY OR INTELLECTUAL PROPERTY RIGHT, IS GRANTED HEREIN. SENSATA DATA SHEETS ARE PROVIDED "AS IS". SENSATA MAKES NO WARRANTIES OR REPRESENTATIONS WITH REGARD TO THE DATA SHEETS OR USE OF THE DATA SHEETS, EXPRESS, IMPLIED OR STATUTORY, INCLUDING ACCURACY OR COMPLETENESS. SENSATA DISCLAIMS ANY WARRANTY OF TITLE AND ANY IMPLIED WARRANTIES OF MERCHANTABILITY, FITNESS FOR A PARTICULAR PURPOSE, QUIET ENJOYMENT, QUIET POSSESSION, AND NON-INFRINGEMENT OF ANY THIRD PARTY INTELLECTUAL PROPERTY RIGHTS WITH REGARD TO SENSATA DATA SHEETS OR USE THEREOF.
All products are sold subject to Sensata's terms and conditions of sale supplied at www.sensata.com SENSATA ASSUMES NO LIABILITY FOR APPLICATIONS ASSISTANCE OR THE DESIGN OF BUYERS' PRODUCTS. BUYER ACKNOWLEDGES AND AGREES THAT IT IS SOLELY RESPONSIBLE FOR COMPLIANCE WITH ALL LEGAL, REGULATORY AND SAFETY-RELATED REQUIREMENTS CONCERNING ITS PRODUCTS, AND ANY USE OF SENSATA COMPONENTS IN ITS APPLICATIONS, NOTWITHSTANDING ANY APPLICATIONS-RELATED INFORMATION OR SUPPORT THAT MAY BE PROVIDED BY SENSATA.
Mailing Address: Sensata Technologies, Inc., 529 Pleasant Street, Attleboro, MA 02703, USA.

CONTACT US

Americas
508-236-2551
electrical-protection-sales@sensata.com
Europe, Middle East & Africa
+31743578156
info-sse@list.sensata.com
Asia Pacific
sales.isasia@list.sensata.com
China +86 (21) 2306 1500
Japan +81 (45) 277 7117
Korea +82 (31) 601 2004
India +91 (80) 67920890
Rest of Asia +886 (2) 27602006 ext 2808

Copyright © 2020 Sensata Technologies, Inc.
Revised 01/17/20