EFR32FG12 Gecko Proprietary Protocol SoC Family Data Sheet

The Gecko proprietary protocol family of SoCs is part of the Wireless Gecko portfolio. Gecko SoCs are ideal for enabling energy-friendly proprietary protocol networking for IoT devices.

The single-die solution provides industry-leading energy efficiency, ultra-fast wakeup times, a scalable power amplifier, an integrated balun and no-compromise MCU features.

Gecko applications include:

- Home and Building Automation and Security
- Metering
- Electronic Shelf Labels
- Industrial Automation
- Commercial and Retail Lighting and Sensing

KEY FEATURES

- 32-bit ARM® Cortex®-M4 core with 40 MHz maximum operating frequency
- Up to 1 MB of flash and 256 kB of RAM
- Pin-compatible across EFR32FG families (exceptions apply for 5V-tolerant pins)
- 12-channel Peripheral Reflex System, Low-Energy Sensor Interface & Multi-channel Capacitive Sense Interface
- Autonomous Hardware Crypto Accelerator and True Random Number Generator
- Integrated PA with up to 19 dBm (2.4 GHz) or 20 dBm (Sub-GHz) TX power
- Integrated balun for 2.4 GHz
- Robust peripheral set and up to 65 GPIO

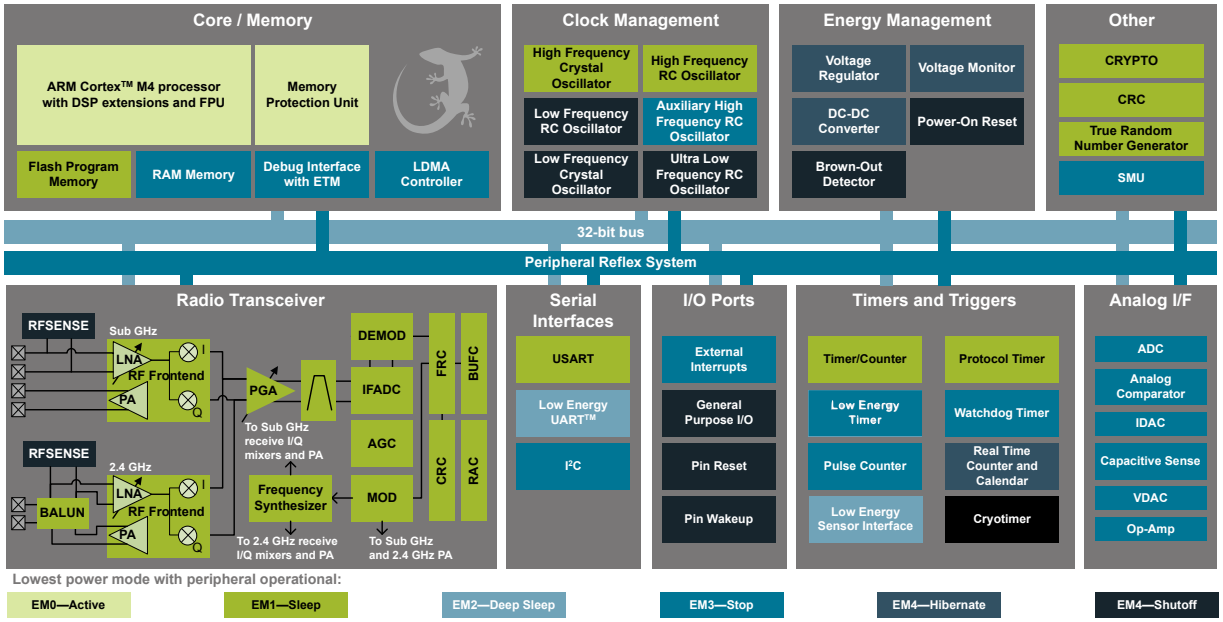

1. Feature List

The EFR32FG12 highlighted features are listed below.

- **Low Power Wireless System-on-Chip**
  - High Performance 32-bit 40 MHz ARM Cortex®-M4 with DSP instruction and floating-point unit for efficient signal processing
  - Embedded Trace Macrocell (ETM) for advanced debugging
  - Up to 1024 kB flash program memory
  - Up to 256 kB RAM data memory
  - 2.4 GHz and Sub-GHz radio operation
  - Transmit power:
    - 2.4 GHz radio: Up to 19 dBm
    - Sub-GHz radio: Up to 20 dBm
- **Low Energy Consumption**
  - 8.4 mA RX current at 38.4 kbps, GFSK, 169 MHz
  - 10.0 mA RX current at 1 Mbps, GFSK, 2.4 GHz
  - 11 mA RX current at 250 kbps, DSSS-OQPSK, 2.4 GHz
  - 8.5 mA TX current at 0 dBm output power at 2.4 GHz
  - 35.3 mA TX current at 14 dBm output power at 868 MHz
  - 70 µA/MHz in Active Mode (EM0)
  - 1.5 µA EM2 DeepSleep current (16 kB RAM retention and RTCC running from LFRCO)
- **High Receiver Performance**
  - -94.8 dBm sensitivity at 1 Mbit/s GFSK, 2.4 GHz
  - -102.7 dBm sensitivity at 250 kbps DSSS-OQPSK, 2.4 GHz
  - -126.2 dBm sensitivity at 600 bps, GFSK, 915 MHz
  - -120.6 dBm sensitivity at 2.4 kbps, GFSK, 868 MHz
  - -107.4 dBm sensitivity at 4.8 kbps, OOK, 433 MHz
  - -112.2 dBm sensitivity at 38.4 kbps, GFSK, 169 MHz
- **Supported Modulation Formats**
  - 2/4 (G)FSK with fully configurable shaping
  - BPSK / DBPSK TX
  - OOK / ASK
  - Shaped OQPSK / (G)MSK
  - Configurable DSSS and FEC
- **Supported Protocols**
  - Proprietary Protocols
  - Wireless M-Bus
  - Selected IEEE 802.15.4g SUN-FSK PHYs
  - Low Power Wide Area Networks
- **Suitable for Systems Targeting Compliance With:**
  - FCC Part 90.210 Mask D, FCC part 15.247, 15.231, 15.249
  - ETSI Category I Operation, EN 300 220, EN 300 328
  - ARIB T-108, T-96
  - China regulatory
- **Wide selection of MCU peripherals**
  - 12-bit 1 Msps SAR Analog to Digital Converter (ADC)
  - 2 × Analog Comparator (ACMP)
  - 2 × Digital to Analog Converter (VDAC)
  - 3 × Operational Amplifier (Opamp)
  - Digital to Analog Current Converter (IDAC)
  - Low-Energy Sensor Interface (LESENSE)
  - Multi-channel Capacitive Sense Interface (CSEN)
  - Up to 54 pins connected to analog channels (APORT) shared between analog peripherals
  - Up to 65 General Purpose I/O pins with output state retention and asynchronous interrupts
  - 8 Channel DMA Controller
  - 12 Channel Peripheral Reflex System (PRS)
  - 2 × 16-bit Timer/Counter
    - 3 or 4 Compare/Capture/PWM channels
  - 2 × 32-bit Timer/Counter
    - 3 or 4 Compare/Capture/PWM channels
  - 32-bit Real Time Counter and Calendar
  - 16-bit Low Energy Timer for waveform generation
  - 32-bit Ultra Low Energy Timer/Counter for periodic wake-up from any Energy Mode
  - 3 × 16-bit Pulse Counter with asynchronous operation
  - 2 × Watchdog Timer with dedicated RC oscillator
  - 4 × Universal Synchronous/Asynchronous Receiver/Transmitter (UART/SPI/SmartCard (ISO 7816)/IrDA/I^2S)
  - Low Energy UART (LEUART™)
  - 2 × I^2C interface with SMBus support and address recognition in EM3 Stop
- **Wide Operating Range**
  - 1.8 V to 3.8 V single power supply
  - Integrated DC-DC, down to 1.8 V output with up to 200 mA load current for system
  - Standard (-40 °C to 85 °C) and Extended (-40 °C to 125 °C) temperature grades available
- **Support for Internet Security**
  - General Purpose CRC
  - True Random Number Generator
  - 2 × Hardware Cryptographic Acceleration for AES 128/256, SHA-1, SHA-2 (SHA-224 and SHA-256) and ECC
- **QFN48 7x7 mm Package**
- **QFN68 8x8 mm Package**
- **BGA125 7x7 mm Package**

2. Ordering Information

Table 2.1. Ordering Information

Ordering Code	Protocol Stack	Frequency Band @ Max TX Power	Flash (kB)	RAM (kB)	GPIO	Package	Temp Range
EFR32FG12P433F1024GL125-C	Proprietary	2.4 GHz @ 19 dBm Sub-GHz @ 20 dBm	1024	256	65	BGA125	-40 to +85°C
EFR32FG12P433F1024GM68-C	Proprietary	2.4 GHz @ 19 dBm Sub-GHz @ 20 dBm	1024	256	46	QFN68	-40 to +85°C
EFR32FG12P433F1024GM48-C	Proprietary	2.4 GHz @ 19 dBm Sub-GHz @ 20 dBm	1024	256	28	QFN48	-40 to +85°C
EFR32FG12P432F1024GL125-C	Proprietary	2.4 GHz @ 19 dBm	1024	256	65	BGA125	-40 to +85°C
EFR32FG12P432F1024GM48-C	Proprietary	2.4 GHz @ 19 dBm	1024	256	31	QFN48	-40 to +85°C
EFR32FG12P431F1024GL125-C	Proprietary	Sub-GHz @ 20 dBm	1024	256	65	BGA125	-40 to +85°C
EFR32FG12P431F1024GM68-C	Proprietary	Sub-GHz @ 20 dBm	1024	256	46	QFN68	-40 to +85°C
EFR32FG12P431F512GM68-C	Proprietary	Sub-GHz @ 20 dBm	512	128	46	QFN68	-40 to +85°C
EFR32FG12P431F1024GM48-C	Proprietary	Sub-GHz @ 20 dBm	1024	256	31	QFN48	-40 to +85°C
EFR32FG12P431F1024IM48-C	Proprietary	Sub-GHz @ 20 dBm	1024	256	31	QFN48	-40 to +125°C
EFR32FG12P232F1024GL125-C	Proprietary	2.4 GHz @ 19 dBm	1024	128	65	BGA125	-40 to +85°C
EFR32FG12P232F1024GM48-C	Proprietary	2.4 GHz @ 19 dBm	1024	128	31	QFN48	-40 to +85°C
EFR32FG12P231F1024GL125-C	Proprietary	Sub-GHz @ 20 dBm	1024	128	65	BGA125	-40 to +85°C
EFR32FG12P231F1024GM68-C	Proprietary	Sub-GHz @ 20 dBm	1024	128	46	QFN68	-40 to +85°C
EFR32FG12P231F512GM68-C	Proprietary	Sub-GHz @ 20 dBm	512	64	46	QFN68	-40 to +85°C
EFR32FG12P231F1024GM48-C	Proprietary	Sub-GHz @ 20 dBm	1024	128	31	QFN48	-40 to +85°C

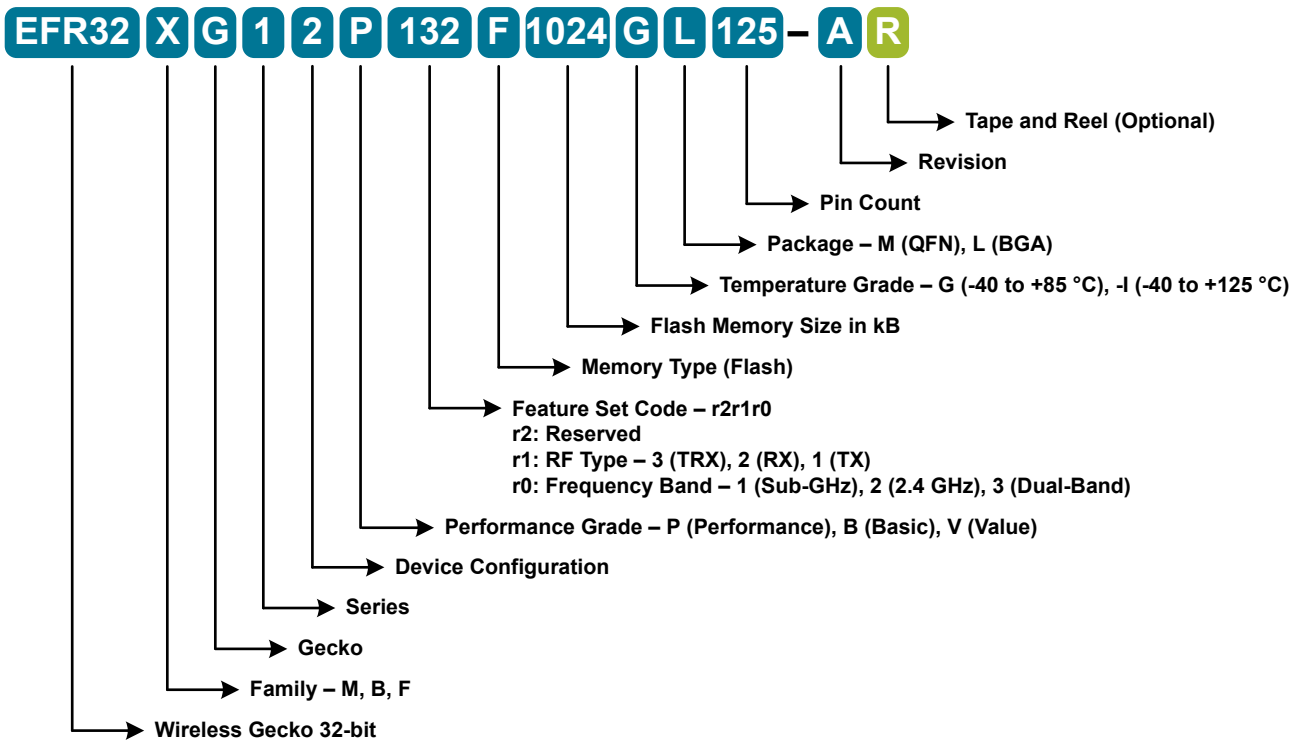

Figure 2.1. Ordering Code Key

Table of Contents

1. Feature List . . . 2

2. Ordering Information . . . 3

3. System Overview . . . 8

3.1 Introduction . . . 8

3.2 Radio . . . 8
- 3.2.1 Antenna Interface . . . 8
- 3.2.2 Fractional-N Frequency Synthesizer . . . 9
- 3.2.3 Receiver Architecture . . . 9
- 3.2.4 Transmitter Architecture . . . 9
- 3.2.5 Wake on Radio . . . 9
- 3.2.6 RFSENSE . . . 10
- 3.2.7 Flexible Frame Handling . . . 10
- 3.2.8 Packet and State Trace . . . 10
- 3.2.9 Data Buffering . . . 10
- 3.2.10 Radio Controller (RAC) . . . 10
- 3.2.11 Random Number Generator . . . 11

3.3 Power . . . 12
- 3.3.1 Energy Management Unit (EMU) . . . 12
- 3.3.2 DC-DC Converter . . . 12
- 3.3.3 Power Domains . . . 12

3.4 General Purpose Input/Output (GPIO) . . . 13

3.5 Clocking . . . 13
- 3.5.1 Clock Management Unit (CMU) . . . 13
- 3.5.2 Internal and External Oscillators . . . 13

3.6 Counters/Timers and PWM . . . 13
- 3.6.1 Timer/Counter (TIMER) . . . 13
- 3.6.2 Wide Timer/Counter (WTIMER) . . . 13
- 3.6.3 Real Time Counter and Calendar (RTCC) . . . 13
- 3.6.4 Low Energy Timer (LETIMER) . . . 14
- 3.6.5 Ultra Low Power Wake-up Timer (CRYOTIMER) . . . 14
- 3.6.6 Pulse Counter (PCNT) . . . 14
- 3.6.7 Watchdog Timer (WDOG) . . . 14

3.7 Communications and Other Digital Peripherals . . . 14
- 3.7.1 Universal Synchronous/Asynchronous Receiver/Transmitter (USART) . . . 14
- 3.7.2 Low Energy Universal Asynchronous Receiver/Transmitter (LEUART) . . . 14
- 3.7.3 Inter-Integrated Circuit Interface (I^2C) . . . 14
- 3.7.4 Peripheral Reflex System (PRS) . . . 14
- 3.7.5 Low Energy Sensor Interface (LESENSE) . . . 15

3.8 Security Features . . . 15
- 3.8.1 General Purpose Cyclic Redundancy Check (GPCRC) . . . 15
- 3.8.2 Crypto Accelerator (CRYPTO) . . . 15
- 3.8.3 True Random Number Generator (TRNG) . . . 15
- 3.8.4 Security Management Unit (SMU) . . . 15

3.9 Analog . . . 15
3.9.1 Analog Port (APORT) . . . 15
3.9.2 Analog Comparator (ACMP) . . . 15
3.9.3 Analog to Digital Converter (ADC) . . . 16
3.9.4 Capacitive Sense (CSEN) . . . 16
3.9.5 Digital to Analog Current Converter (IDAC) . . . 16
3.9.6 Digital to Analog Converter (VDAC) . . . 16
3.9.7 Operational Amplifiers . . . 16
3.10 Reset Management Unit (RMU) . . . 16
3.11 Core and Memory . . . 16
3.11.1 Processor Core . . . 16
3.11.2 Memory System Controller (MSC) . . . 17
3.11.3 Linked Direct Memory Access Controller (LDMA) . . . 17
3.12 Memory Map . . . 18
3.13 Configuration Summary . . . 20
4. Electrical Specifications . . . 21
4.1 Electrical Characteristics . . . 21
4.1.1 Absolute Maximum Ratings . . . 22
4.1.2 Operating Conditions . . . 24
4.1.3 Thermal Characteristics . . . 26
4.1.4 DC-DC Converter . . . 27
4.1.5 Current Consumption . . . 29
4.1.6 Wake Up Times . . . 39
4.1.7 Brown Out Detector (BOD) . . . 40
4.1.8 Frequency Synthesizer . . . 41
4.1.9 2.4 GHz RF Transceiver Characteristics . . . 42
4.1.10 Sub-GHz RF Transceiver Characteristics . . . 53
4.1.11 Modem . . . 77
4.1.12 Oscillators . . . 78
4.1.13 Flash Memory Characteristics . . . 82
4.1.14 General-Purpose I/O (GPIO) . . . 83
4.1.15 Voltage Monitor (VMON) . . . 85
4.1.16 Analog to Digital Converter (ADC) . . . 86
4.1.17 Analog Comparator (ACMP) . . . 88
4.1.18 Digital to Analog Converter (VDAC) . . . 91
4.1.19 Current Digital to Analog Converter (IDAC) . . . 94
4.1.20 Capacitive Sense (CSEN) . . . 96
4.1.21 Operational Amplifier (OPAMP) . . . 98
4.1.22 Pulse Counter (PCNT) . . . 101
4.1.23 Analog Port (APORT) . . . 101
4.1.24 I2C . . . 102
4.1.25 USART SPI . . . 105
4.2 Typical Performance Curves . . . 106
4.2.1 Supply Current . . . 107
4.2.2 DC-DC Converter . . . 112
4.2.3 2.4 GHz Radio . . . 114

5. Typical Connection Diagrams . . . 116
5.1 Power . . . 116
5.2 RF Matching Networks . . . 118
5.3 Other Connections . . . 119
6. Pin Definitions . . . 120
6.1 BGA125 2.4 GHz and Sub-GHz Device Pinout . . . 120
6.2 BGA125 2.4 GHz Device Pinout . . . 124
6.3 BGA125 Sub-GHz Device Pinout . . . 127
6.4 QFN68 2.4 GHz and Sub-GHz Device Pinout . . . 130
6.5 QFN68 Sub-GHz Device Pinout . . . 133
6.6 QFN48 2.4 GHz and Sub-GHz Device Pinout . . . 135
6.7 QFN48 2.4 GHz Device Pinout . . . 137
6.8 QFN48 Sub-GHz Device Pinout . . . 139
6.9 GPIO Functionality Table . . . 141
6.10 Alternate Functionality Overview . . . 184
6.11 Analog Port (APORT) Client Maps . . . 199
7. BGA125 Package Specifications . . . 208
7.1 BGA125 Package Dimensions . . . 208
7.2 BGA125 PCB Land Pattern . . . 210
7.3 BGA125 Package Marking . . . 212
8. QFN48 Package Specifications . . . 213
8.1 QFN48 Package Dimensions . . . 213
8.2 QFN48 PCB Land Pattern . . . 215
8.3 QFN48 Package Marking . . . 217
9. QFN68 Package Specifications . . . 218
9.1 QFN68 Package Dimensions . . . 218
9.2 QFN68 PCB Land Pattern . . . 220
9.3 QFN68 Package Marking . . . 222
10. Revision History . . . 223

3. System Overview

3.1 Introduction

The EFR32 product family combines an energy-friendly MCU with a highly integrated radio transceiver. The devices are well suited for any battery operated application as well as other systems requiring high performance and low energy consumption. This section gives a short introduction to the full radio and MCU system. The detailed functional description can be found in the EFR32xG12 Wireless Gecko Reference Manual.

A block diagram of the EFR32FG12 family is shown in Figure 3.1 Detailed EFR32FG12 Block Diagram on page 8. The diagram shows a superset of features available on the family, which vary by OPN. For more information about specific device features, consult Ordering Information.

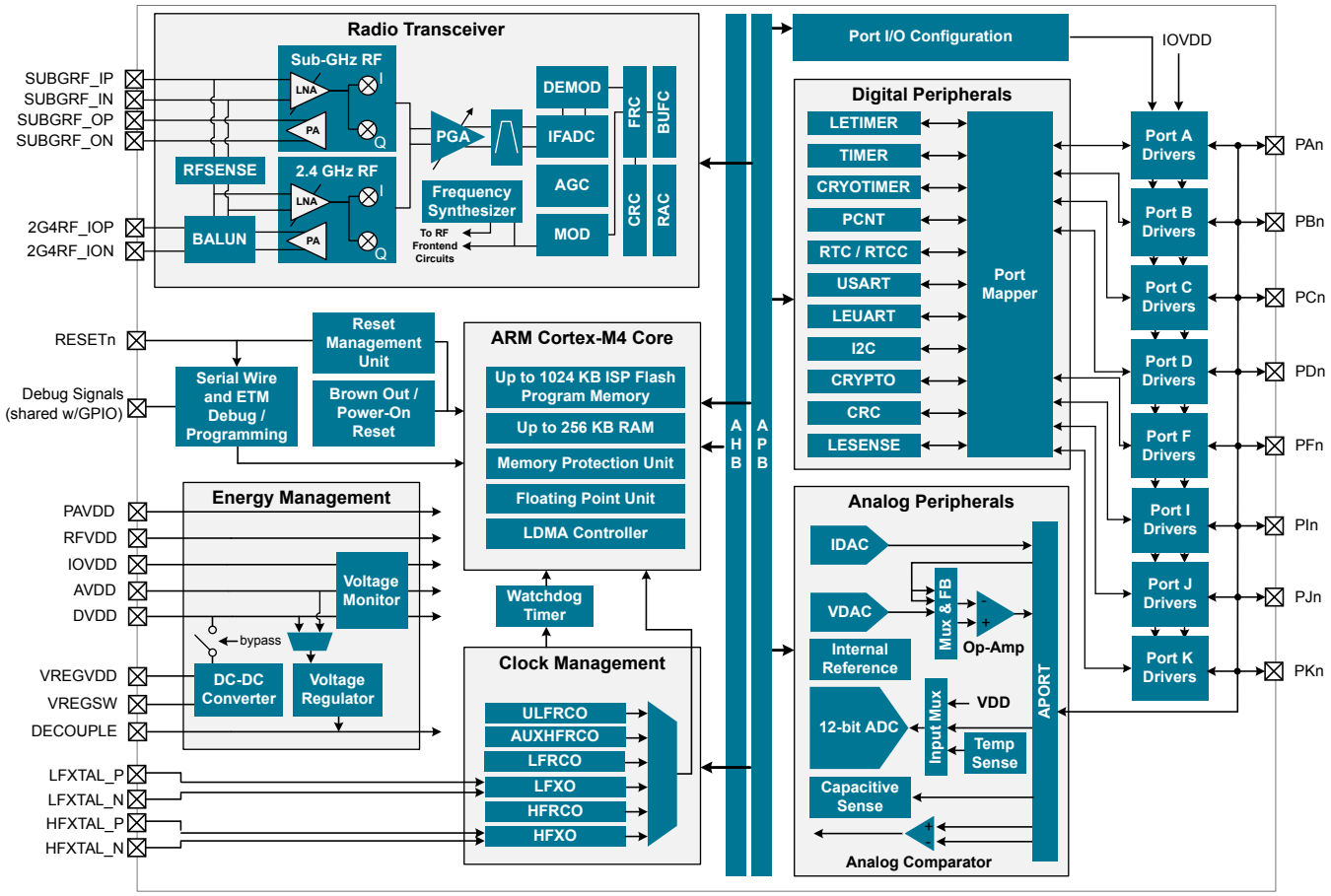

Figure 3.1. Detailed EFR32FG12 Block Diagram

3.2 Radio

The Gecko family features a radio transceiver supporting proprietary wireless protocols.

3.2.1 Antenna Interface

The 2.4 GHz antenna interface consists of two pins (2G4RF_IOP and 2G4RF_ION) that interface directly to the on-chip BALUN. The 2G4RF_ION pin should be grounded externally.

The external components and power supply connections for the antenna interface typical applications are shown in the RF Matching Networks section.

3.2.2 Fractional-N Frequency Synthesizer

The EFR32FG12 contains a high performance, low phase noise, fully integrated fractional-N frequency synthesizer. The synthesizer is used in receive mode to generate the LO frequency used by the down-conversion mixer. It is also used in transmit mode to directly generate the modulated RF carrier.

The fractional-N architecture provides excellent phase noise performance combined with frequency resolution better than 100 Hz, with low energy consumption. The synthesizer has fast frequency settling which allows very short receiver and transmitter wake up times to optimize system energy consumption.

3.2.3 Receiver Architecture

The EFR32FG12 uses a low-IF receiver architecture, consisting of a Low-Noise Amplifier (LNA) followed by an I/Q down-conversion mixer, employing a crystal reference. The I/Q signals are further filtered and amplified before being sampled by the IF analog-to-digital converter (IFADC).

The IF frequency is configurable from 150 kHz to 1371 kHz. The IF can further be configured for high-side or low-side injection, providing flexibility with respect to known interferers at the image frequency.

The Automatic Gain Control (AGC) block adjusts the receiver gain to optimize performance and avoid saturation for excellent selectivity and blocking performance. The 2.4 GHz radio is calibrated at production to improve image rejection performance. The sub-GHz radio can be calibrated on-demand by the user for the desired frequency band.

Demodulation is performed in the digital domain. The demodulator performs configurable decimation and channel filtering to allow receive bandwidths ranging from 0.1 to 2530 kHz. High carrier frequency and baud rate offsets are tolerated by active estimation and compensation. Advanced features supporting high quality communication under adverse conditions include forward error correction by block and convolutional coding as well as Direct Sequence Spread Spectrum (DSSS) for 2.4 GHz and sub-GHz bands.

A Received Signal Strength Indicator (RSSI) is available for signal quality metrics, for level-based proximity detection, and for RF channel access by Collision Avoidance (CA) or Listen Before Talk (LBT) algorithms. An RSSI capture value is associated with each received frame and the dynamic RSSI measurement can be monitored throughout reception.

The EFR32FG12 features integrated support for antenna diversity to mitigate the problem of frequency-selective fading due to multipath propagation and improve link budget. Support for antenna diversity is available for specific PHY configurations in 2.4 GHz and sub-GHz bands. Internal configurable hardware controls an external switch for automatic switching between antennae during RF receive detection operations.

Note: Due to the shorter preamble of 802.15.4 and BLE packets, RX diversity is not supported.

3.2.4 Transmitter Architecture

The EFR32FG12 uses a direct-conversion transmitter architecture. For constant envelope modulation formats, the modulator controls phase and frequency modulation in the frequency synthesizer. Transmit symbols or chips are optionally shaped by a digital shaping filter. The shaping filter is fully configurable, including the BT product, and can be used to implement Gaussian or Raised Cosine shaping.

Carrier Sense Multiple Access - Collision Avoidance (CSMA-CA) or Listen Before Talk (LBT) algorithms can be automatically timed by the EFR32FG12. These algorithms are typically defined by regulatory standards to improve inter-operability in a given bandwidth between devices that otherwise lack synchronized RF channel access.

3.2.5 Wake on Radio

The Wake on Radio feature allows flexible, autonomous RF sensing, qualification, and demodulation without required MCU activity, using a subsystem of the EFR32FG12 including the Radio Controller (RAC), Peripheral Reflex System (PRS), and Low Energy peripherals.

3.2.6 RFSENSE

The RFSENSE peripheral generates a system wakeup interrupt upon detection of wideband RF energy at the antenna interface, providing true RF wakeup capabilities from low energy modes including EM2, EM3 and EM4.

RFSENSE triggers on a relatively strong RF signal and is available in the lowest energy modes, allowing exceptionally low energy consumption. RFSENSE does not demodulate or otherwise qualify the received signal, but software may respond to the wakeup event by enabling normal RF reception.

Various strategies for optimizing power consumption and system response time in presence of false alarms may be employed using available timer peripherals.

3.2.7 Flexible Frame Handling

EFR32FG12 has an extensive and flexible frame handling support for easy implementation of even complex communication protocols. The Frame Controller (FRC) supports all low level and timing critical tasks together with the Radio Controller and Modulator/Demodulator:

- Highly adjustable preamble length
- Up to 2 simultaneous synchronization words, each up to 32 bits and providing separate interrupts
- Frame disassembly and address matching (filtering) to accept or reject frames
- Automatic ACK frame assembly and transmission
- Fully flexible CRC generation and verification:
  - Multiple CRC values can be embedded in a single frame
  - 8, 16, 24 or 32-bit CRC value
  - Configurable CRC bit and byte ordering
- Selectable bit-ordering (least significant or most significant bit first)
- Optional data whitening
- Optional Forward Error Correction (FEC), including convolutional encoding / decoding and block encoding / decoding
- Half rate convolutional encoder and decoder with constraint lengths from 2 to 7 and optional puncturing
- Optional symbol interleaving, typically used in combination with FEC
- Symbol coding, such as Manchester or DSSS, or biphase space encoding using FEC hardware
- UART encoding over air, with start and stop bit insertion / removal
- Test mode support, such as modulated or unmodulated carrier output
- Received frame timestamping

3.2.8 Packet and State Trace

The EFR32FG12 Frame Controller has a packet and state trace unit that provides valuable information during the development phase. It features:

- Non-intrusive trace of transmit data, receive data and state information
- Data observability on a single-pin UART data output, or on a two-pin SPI data output
- Configurable data output bitrate / baudrate
- Multiplexed transmitted data, received data and state / meta information in a single serial data stream

3.2.9 Data Buffering

The EFR32FG12 features an advanced Radio Buffer Controller (BUFC) capable of handling up to 4 buffers of adjustable size from 64 bytes to 4096 bytes. Each buffer can be used for RX, TX or both. The buffer data is located in RAM, enabling zero-copy operations.

3.2.10 Radio Controller (RAC)

The Radio Controller controls the top level state of the radio subsystem in the EFR32FG12. It performs the following tasks:

- Precisely-timed control of enabling and disabling of the receiver and transmitter circuitry
- Run-time calibration of receiver, transmitter and frequency synthesizer
- Detailed frame transmission timing, including optional LBT or CSMA-CA

3.2.11 Random Number Generator

The Frame Controller (FRC) implements a random number generator that uses entropy gathered from noise in the RF receive chain. The data is suitable for use in cryptographic applications.

Output from the random number generator can be used either directly or as a seed or entropy source for software-based random number generator algorithms such as Fortuna.

3.3 Power

The EFR32FG12 has an Energy Management Unit (EMU) and efficient integrated regulators to generate internal supply voltages. Only a single external supply voltage is required, from which all internal voltages are created. An optional integrated DC-DC buck regulator can be utilized to further reduce the current consumption. The DC-DC regulator requires one external inductor and one external capacitor.

The EFR32FG12 device family includes support for internal supply voltage scaling, as well as two different power domains groups for peripherals. These enhancements allow for further supply current reductions and lower overall power consumption.

AVDD and VREGVDD need to be 1.8 V or higher for the MCU to operate across all conditions; however the rest of the system will operate down to 1.62 V, including the digital supply and I/O. This means that the device is fully compatible with 1.8 V components. Running from a sufficiently high supply, the device can use the DC-DC to regulate voltage not only for itself, but also for other PCB components, supplying up to a total of 200 mA.

3.3.1 Energy Management Unit (EMU)

The Energy Management Unit manages transitions of energy modes in the device. Each energy mode defines which peripherals and features are available and the amount of current the device consumes. The EMU can also be used to turn off the power to unused RAM blocks, and it contains control registers for the DC-DC regulator and the Voltage Monitor (VMON). The VMON is used to monitor multiple supply voltages. It has multiple channels which can be programmed individually by the user to determine if a sensed supply has fallen below a chosen threshold.

3.3.2 DC-DC Converter

The DC-DC buck converter covers a wide range of load currents and provides up to 90% efficiency in energy modes EM0, EM1, EM2 and EM3, and can supply up to 200 mA to the device and surrounding PCB components. Patented RF noise mitigation allows operation of the DC-DC converter without degrading sensitivity of radio components. Protection features include programmable current limiting, short-circuit protection, and dead-time protection. The DC-DC converter may also enter bypass mode when the input voltage is too low for efficient operation. In bypass mode, the DC-DC input supply is internally connected directly to its output through a low resistance switch. Bypass mode also supports in-rush current limiting to prevent input supply voltage droops due to excessive output current transients.

3.3.3 Power Domains

The EFR32FG12 has two peripheral power domains for operation in EM2 and lower. If all of the peripherals in a peripheral power domain are configured as unused, the power domain for that group will be powered off in the low-power mode, reducing the overall current consumption of the device.

Table 3.1. Peripheral Power Subdomains

Peripheral Power Domain 1	Peripheral Power Domain 2
ACMP0	ACMP1
PCNT0	PCNT1
ADC0	PCNT2
LETIMER0	CSEN
LESENSE	DAC0
APORT	LEUART0
-	I2C0
-	I2C1
-	IDAC

3.4 General Purpose Input/Output (GPIO)

EFR32FG12 has up to 65 General Purpose Input/Output pins. Each GPIO pin can be individually configured as either an output or input. More advanced configurations including open-drain, open-source, and glitch-filtering can be configured for each individual GPIO pin. The GPIO pins can be overridden by peripheral connections, like SPI communication. Each peripheral connection can be routed to several GPIO pins on the device. The input value of a GPIO pin can be routed through the Peripheral Reflex System to other peripherals. The GPIO subsystem supports asynchronous external pin interrupts.

3.5 Clocking

3.5.1 Clock Management Unit (CMU)

The Clock Management Unit controls oscillators and clocks in the EFR32FG12. Individual enabling and disabling of clocks to all peripherals is performed by the CMU. The CMU also controls enabling and configuration of the oscillators. A high degree of flexibility allows software to optimize energy consumption in any specific application by minimizing power dissipation in unused peripherals and oscillators.

3.5.2 Internal and External Oscillators

The EFR32FG12 supports two crystal oscillators and fully integrates four RC oscillators, listed below.

- A high frequency crystal oscillator (HFXO) with integrated load capacitors, tunable in small steps, provides a precise timing reference for the MCU. Crystal frequencies in the range from 38 to 40 MHz are supported. An external clock source such as a TCXO can also be applied to the HFXO input for improved accuracy over temperature.
- A 32.768 kHz crystal oscillator (LFXO) provides an accurate timing reference for low energy modes.
- An integrated high frequency RC oscillator (HFRCO) is available for the MCU system, when crystal accuracy is not required. The HFRCO employs fast startup at minimal energy consumption combined with a wide frequency range.
- An integrated auxilliary high frequency RC oscillator (AUXHFRCO) is available for timing the general-purpose ADC and the Serial Wire Viewer port with a wide frequency range.
- An integrated low frequency 32.768 kHz RC oscillator (LFRCO) can be used as a timing reference in low energy modes, when crystal accuracy is not required.
- An integrated ultra-low frequency 1 kHz RC oscillator (ULFRCO) is available to provide a timing reference at the lowest energy consumption in low energy modes.

3.6 Counters/Timers and PWM

3.6.1 Timer/Counter (TIMER)

TIMER peripherals keep track of timing, count events, generate PWM outputs and trigger timed actions in other peripherals through the PRS system. The core of each TIMER is a 16-bit counter with up to 4 compare/capture channels. Each channel is configurable in one of three modes. In capture mode, the counter state is stored in a buffer at a selected input event. In compare mode, the channel output reflects the comparison of the counter to a programmed threshold value. In PWM mode, the TIMER supports generation of pulse-width modulation (PWM) outputs of arbitrary waveforms defined by the sequence of values written to the compare registers, with optional dead-time insertion available in timer unit TIMER_0 only.

3.6.2 Wide Timer/Counter (WTIMER)

WTIMER peripherals function just as TIMER peripherals, but are 32 bits wide. They keep track of timing, count events, generate PWM outputs and trigger timed actions in other peripherals through the PRS system. The core of each WTIMER is a 32-bit counter with up to 4 compare/capture channels. Each channel is configurable in one of three modes. In capture mode, the counter state is stored in a buffer at a selected input event. In compare mode, the channel output reflects the comparison of the counter to a programmed threshold value. In PWM mode, the WTIMER supports generation of pulse-width modulation (PWM) outputs of arbitrary waveforms defined by the sequence of values written to the compare registers, with optional dead-time insertion available in timer unit WTIMER_0 only.

3.6.3 Real Time Counter and Calendar (RTCC)

The Real Time Counter and Calendar (RTCC) is a 32-bit counter providing timekeeping in all energy modes. The RTCC includes a Binary Coded Decimal (BCD) calendar mode for easy time and date keeping. The RTCC can be clocked by any of the on-board oscillators with the exception of the AUXHFRCO, and it is capable of providing system wake-up at user defined instances. When receiving frames, the RTCC value can be used for timestamping. The RTCC includes 128 bytes of general purpose data retention, allowing easy and convenient data storage in all energy modes down to EM4H.

3.6.4 Low Energy Timer (LETIMER)

The unique LETIMER is a 16-bit timer that is available in energy mode EM0 Active, EM1 Sleep, EM2 Deep Sleep, and EM3 Stop. This allows it to be used for timing and output generation when most of the device is powered down, allowing simple tasks to be performed while the power consumption of the system is kept at an absolute minimum. The LETIMER can be used to output a variety of waveforms with minimal software intervention. The LETIMER is connected to the Real Time Counter and Calendar (RTCC), and can be configured to start counting on compare matches from the RTCC.

3.6.5 Ultra Low Power Wake-up Timer (CRYOTIMER)

The CRYOTIMER is a 32-bit counter that is capable of running in all energy modes. It can be clocked by either the 32.768 kHz crystal oscillator (LFXO), the 32.768 kHz RC oscillator (LFRCO), or the 1 kHz RC oscillator (ULFRCO). It can provide periodic Wakeup events and PRS signals which can be used to wake up peripherals from any energy mode. The CRYOTIMER provides a wide range of interrupt periods, facilitating flexible ultra-low energy operation.

3.6.6 Pulse Counter (PCNT)

The Pulse Counter (PCNT) peripheral can be used for counting pulses on a single input or to decode quadrature encoded inputs. The clock for PCNT is selectable from either an external source on pin PCTNn_S0IN or from an internal timing reference, selectable from among any of the internal oscillators, except the AUXHFRCO. The peripheral may operate in energy mode EM0 Active, EM1 Sleep, EM2 Deep Sleep, and EM3 Stop.

3.6.7 Watchdog Timer (WDOG)

The watchdog timer can act both as an independent watchdog or as a watchdog synchronous with the CPU clock. It has windowed monitoring capabilities, and can generate a reset or different interrupts depending on the failure mode of the system. The watchdog can also monitor autonomous systems driven by PRS.

3.7 Communications and Other Digital Peripherals

3.7.1 Universal Synchronous/Asynchronous Receiver/Transmitter (USART)

The Universal Synchronous/Asynchronous Receiver/Transmitter is a flexible serial I/O interface. It supports full duplex asynchronous UART communication with hardware flow control as well as RS-485, SPI, MicroWire and 3-wire. It can also interface with devices supporting:

- ISO7816 SmartCards
- IrDA
- I^2S

3.7.2 Low Energy Universal Asynchronous Receiver/Transmitter (LEUART)

The unique LEUART™ provides two-way UART communication on a strict power budget. Only a 32.768 kHz clock is needed to allow UART communication up to 9600 baud. The LEUART includes all necessary hardware to make asynchronous serial communication possible with a minimum of software intervention and energy consumption.

3.7.3 Inter-Integrated Circuit Interface (I^2C)

The I^2C interface enables communication between the MCU and a serial I^2C bus. It is capable of acting as both a master and a slave and supports multi-master buses. Standard-mode, fast-mode and fast-mode plus speeds are supported, allowing transmission rates from 10 kbit/s up to 1 Mbit/s. Slave arbitration and timeouts are also available, allowing implementation of an SMBus-compliant system. The interface provided to software by the I^2C peripheral allows precise timing control of the transmission process and highly automated transfers. Automatic recognition of slave addresses is provided in active and low energy modes.

3.7.4 Peripheral Reflex System (PRS)

The Peripheral Reflex System provides a communication network between different peripherals without software involvement. Peripherals producing Reflex signals are called producers. The PRS routes Reflex signals from producers to consumer peripherals, which in turn perform actions in response. Edge triggers and other functionality such as simple logic operations (AND, OR, NOT) can be applied by the PRS to the signals. The PRS allows peripheral to act autonomously without waking the MCU core, saving power.

3.7.5 Low Energy Sensor Interface (LESENSE)

The Low Energy Sensor Interface LESENSE™ is a highly configurable sensor interface with support for up to 16 individually configurable sensors. By controlling the analog comparators, ADC, and DAC, LESENSE is capable of supporting a wide range of sensors and measurement schemes, and can for instance measure LC sensors, resistive sensors and capacitive sensors. LESENSE also includes a programmable finite state machine which enables simple processing of measurement results without CPU intervention. LESENSE is available in energy mode EM2, in addition to EM0 and EM1, making it ideal for sensor monitoring in applications with a strict energy budget.

3.8 Security Features

3.8.1 General Purpose Cyclic Redundancy Check (GPCRC)

The GPCRC block implements a Cyclic Redundancy Check (CRC) function. It supports both 32-bit and 16-bit polynomials. The supported 32-bit polynomial is 0x04C11DB7 (IEEE 802.3), while the 16-bit polynomial can be programmed to any value, depending on the needs of the application.

3.8.2 Crypto Accelerator (CRYPTO)

The Crypto Accelerator is a fast and energy-efficient autonomous hardware encryption and decryption accelerator. EFR32 devices support AES encryption and decryption with 128- or 256-bit keys, ECC over both GF(P) and GF(2^m), SHA-1 and SHA-2 (SHA-224 and SHA-256).

Supported block cipher modes of operation for AES include: ECB, CTR, CBC, PCBC, CFB, OFB, GCM, CBC-MAC, GMAC and CCM.

Supported ECC NIST recommended curves include P-192, P-224, P-256, K-163, K-233, B-163 and B-233.

The CRYPTO1 block is tightly linked to the Radio Buffer Controller (BUFC) enabling fast and efficient autonomous cipher operations on data buffer content. It allows fast processing of GCM (AES), ECC and SHA with little CPU intervention.

CRYPTO also provides trigger signals for DMA read and write operations.

3.8.3 True Random Number Generator (TRNG)

The TRNG is a non-deterministic random number generator based on a full hardware solution. The TRNG is validated with NIST800-22 and AIS-31 test suites as well as being suitable for FIPS 140-2 certification (for the purposes of cryptographic key generation).

Note: TRNG operation is only supported at VSCALE2. TRNG cannot be used at VSCALE0.

3.8.4 Security Management Unit (SMU)

The Security Management Unit (SMU) allows software to set up fine-grained security for peripheral access, which is not possible in the Memory Protection Unit (MPU). Peripherals may be secured by hardware on an individual basis, such that only priveleged accesses to the peripheral's register interface will be allowed. When an access fault occurs, the SMU reports the specific peripheral involved and can optionally generate an interrupt.

3.9 Analog

3.9.1 Analog Port (APORT)

The Analog Port (APORT) is an analog interconnect matrix allowing access to many analog peripherals on a flexible selection of pins. Each APORT bus consists of analog switches connected to a common wire. Since many clients can operate differentially, buses are grouped by X/Y pairs.

3.9.2 Analog Comparator (ACMP)

The Analog Comparator is used to compare the voltage of two analog inputs, with a digital output indicating which input voltage is higher. Inputs are selected from among internal references and external pins. The tradeoff between response time and current consumption is configurable by software. Two 6-bit reference dividers allow for a wide range of internally-programmable reference sources. The ACMP can also be used to monitor the supply voltage. An interrupt can be generated when the supply falls below or rises above the programmable threshold.

3.9.3 Analog to Digital Converter (ADC)

The ADC is a Successive Approximation Register (SAR) architecture, with a resolution of up to 12 bits at up to 1 Msps. The output sample resolution is configurable and additional resolution is possible using integrated hardware for averaging over multiple samples. The ADC includes integrated voltage references and an integrated temperature sensor. Inputs are selectable from a wide range of sources, including pins configurable as either single-ended or differential.

3.9.4 Capacitive Sense (CSEN)

The CSEN peripheral is a dedicated Capacitive Sensing block for implementing touch-sensitive user interface elements such a switches and sliders. The CSEN peripheral uses a charge ramping measurement technique, which provides robust sensing even in adverse conditions including radiated noise and moisture. The peripheral can be configured to take measurements on a single port pin or scan through multiple pins and store results to memory through DMA. Several channels can also be shorted together to measure the combined capacitance or implement wake-on-touch from very low energy modes. Hardware includes a digital accumulator and an averaging filter, as well as digital threshold comparators to reduce software overhead.

3.9.5 Digital to Analog Current Converter (IDAC)

The IDAC can source or sink a configurable constant current. This current can be driven on an output pin or routed to the selected ADC input pin for capacitive sensing. The full-scale current is programmable between 0.05 µA and 64 µA with several ranges consisting of various step sizes.

3.9.6 Digital to Analog Converter (VDAC)

The Digital to Analog Converter (VDAC) can convert a digital value to an analog output voltage. The VDAC is a fully differential, 500 ksps, 12-bit converter. The opamps are used in conjunction with the VDAC, to provide output buffering. One opamp is used per single-ended channel, or two opamps are used to provide differential outputs. The VDAC may be used for a number of different applications such as sensor interfaces or sound output. The VDAC can generate high-resolution analog signals while the MCU is operating at low frequencies and with low total power consumption. Using DMA and a timer, the VDAC can be used to generate waveforms without any CPU intervention. The VDAC is available in all energy modes down to and including EM3.

3.9.7 Operational Amplifiers

The opamps are low power amplifiers with a high degree of flexibility targeting a wide variety of standard opamp application areas, and are available down to EM3. With flexible built-in programming for gain and interconnection they can be configured to support multiple common opamp functions. All pins are also available externally for filter configurations. Each opamp has a rail to rail input and a rail to rail output. They can be used in conjunction with the VDAC peripheral or in stand-alone configurations. The opamps save energy, PCB space, and cost as compared with standalone opamps because they are integrated on-chip.

3.10 Reset Management Unit (RMU)

The RMU is responsible for handling reset of the EFR32FG12. A wide range of reset sources are available, including several power supply monitors, pin reset, software controlled reset, core lockup reset, and watchdog reset.

3.11 Core and Memory

3.11.1 Processor Core

The ARM Cortex-M processor includes a 32-bit RISC processor integrating the following features and tasks in the system:

- ARM Cortex-M4 RISC processor achieving 1.25 Dhrystone MIPS/MHz
- Memory Protection Unit (MPU) supporting up to 8 memory segments
- Up to 1024 kB flash program memory
- Up to 256 kB RAM data memory
- Configuration and event handling of all peripherals
- 2-pin Serial-Wire debug interface

3.11.2 Memory System Controller (MSC)

The Memory System Controller (MSC) is the program memory unit of the microcontroller. The flash memory is readable and writable from both the Cortex-M and DMA. The flash memory is divided into two blocks; the main block and the information block. Program code is normally written to the main block, whereas the information block is available for special user data and flash lock bits. There is also a read-only page in the information block containing system and device calibration data. Read and write operations are supported in energy modes EM0 Active and EM1 Sleep.

3.11.3 Linked Direct Memory Access Controller (LDMA)

The Linked Direct Memory Access (LDMA) controller allows the system to perform memory operations independently of software. This reduces both energy consumption and software workload. The LDMA allows operations to be linked together and staged, enabling sophisticated operations to be implemented.

3.12 Memory Map

The EFR32FG12 memory map is shown in the figures below. RAM and flash sizes are for the largest memory configuration.

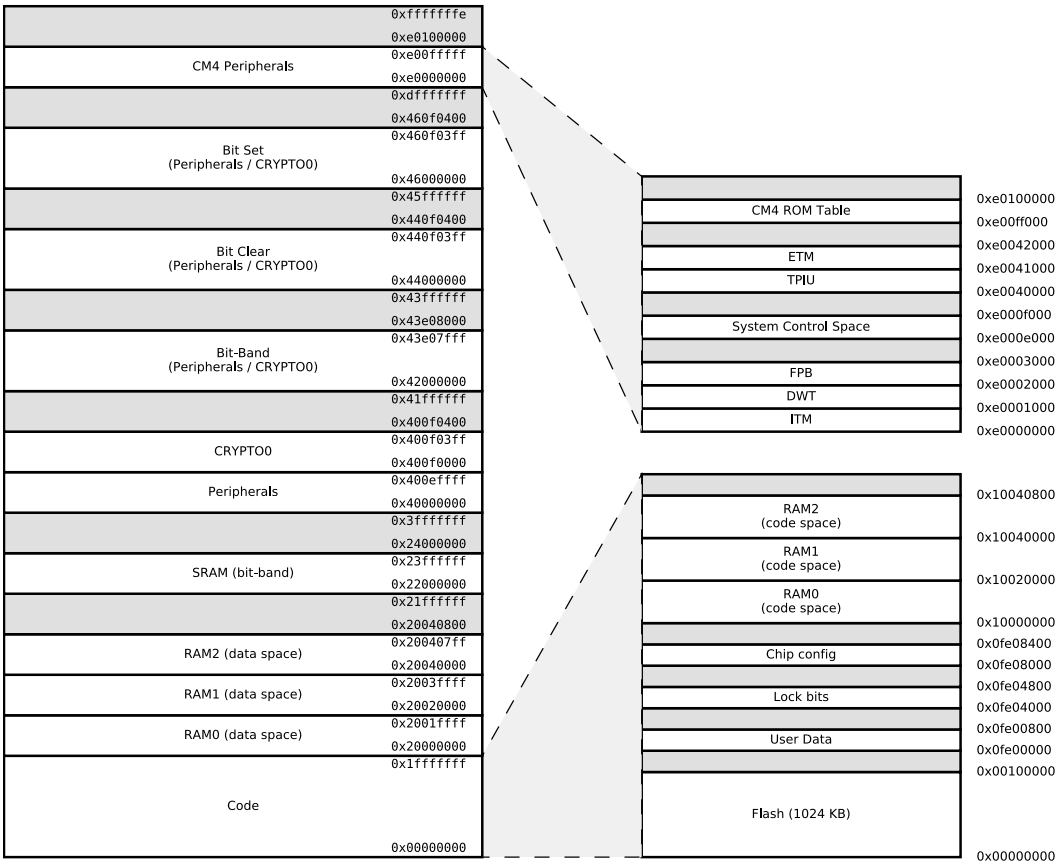

Figure 3.2. EFR32FG12 Memory Map — Core Peripherals and Code Space

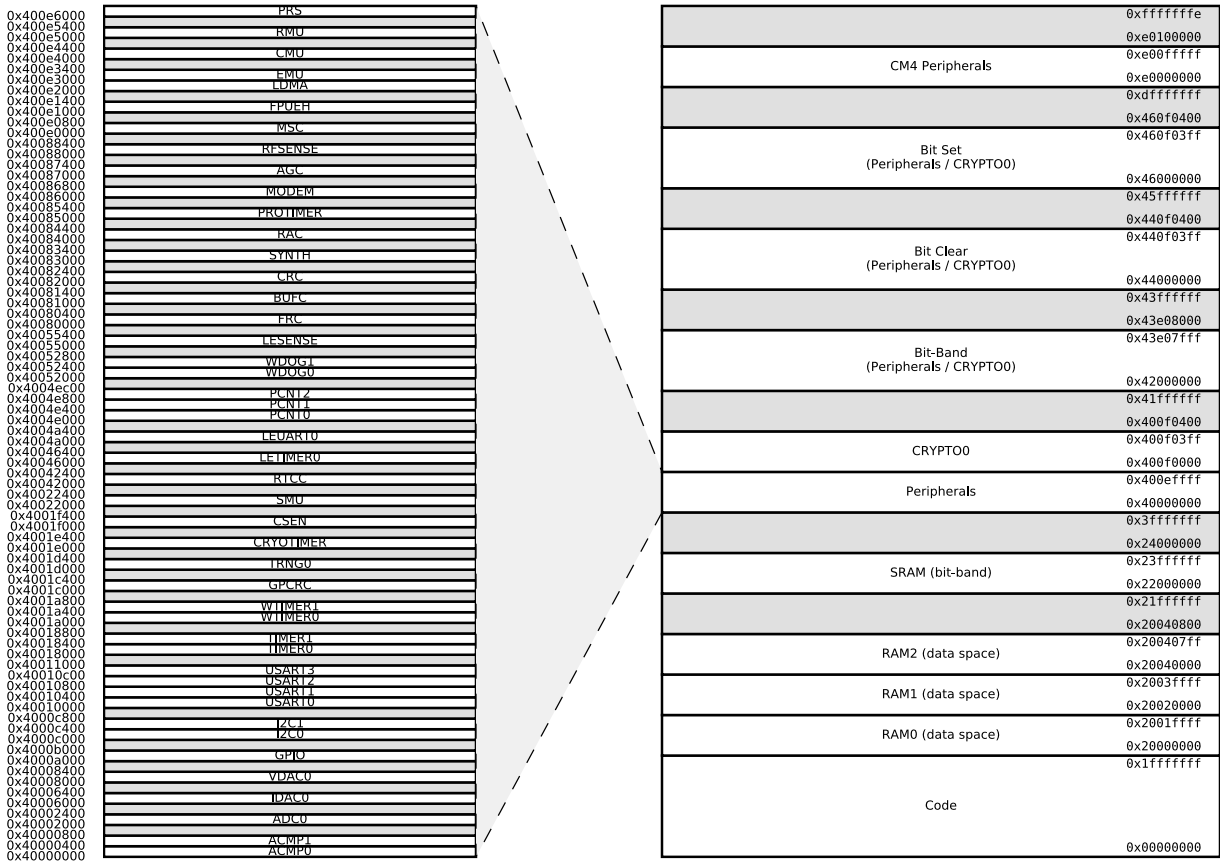

Figure 3.3. EFR32FG12 Memory Map — Peripherals

3.13 Configuration Summary

The features of the EFR32FG12 are a subset of the feature set described in the device reference manual. The table below describes device specific implementation of the features. Remaining modules support full configuration.

Table 3.2. Configuration Summary

Module	Configuration	Pin Connections
USART0	IrDA SmartCard	US0_TX, US0_RX, US0_CLK, US0_CS
USART1	I^2S SmartCard	US1_TX, US1_RX, US1_CLK, US1_CS
USART2	IrDA SmartCard	US2_TX, US2_RX, US2_CLK, US2_CS
USART3	I^2S SmartCard	US3_TX, US3_RX, US3_CLK, US3_CS
TIMER0	with DTI	TIM0_CC[2:0], TIM0_CDTI[2:0]
TIMER1	-	TIM1_CC[3:0]
WTIMER0	with DTI	WTIM0_CC[2:0], WTIM0_CDTI[2:0]
WTIMER1	-	WTIM1_CC[3:0]

4. Electrical Specifications

4.1 Electrical Characteristics

All electrical parameters in all tables are specified under the following conditions, unless stated otherwise:

- Typical values are based on T_{AMB}=25 °C and V_{DD}= 3.3 V, by production test and/or technology characterization.
- Radio performance numbers are measured in conducted mode, based on Silicon Laboratories reference designs using output power-specific external RF impedance-matching networks for interfacing to a 50 Ω antenna.
- Minimum and maximum values represent the worst conditions across supply voltage, process variation, and operating temperature, unless stated otherwise.

Refer to 4.1.2.1 General Operating Conditions for more details about operational supply and temperature limits.

4.1.1 Absolute Maximum Ratings

Stresses above those listed below may cause permanent damage to the device. This is a stress rating only and functional operation of the devices at those or any other conditions above those indicated in the operation listings of this specification is not implied. Exposure to maximum rating conditions for extended periods may affect device reliability. For more information on the available quality and reliability data, see the Quality and Reliability Monitor Report at http://www.silabs.com/support/quality/pages/default.aspx.

Table 4.1. Absolute Maximum Ratings

Parameter	Symbol	Test Condition	Min	Typ	Max	Unit
Storage temperature range	T_{STG}		-50	—	150	°C
Voltage on any supply pin	V_{DDMAX}		-0.3	—	3.8	V
Voltage ramp rate on any supply pin	$V_{DDRAMPMAX}$		—	—	1	V / µs
DC voltage on any GPIO pin	V_{DIGPIN}	5V tolerant GPIO pins[1 2 3]	-0.3	—	Min of 5.25 and IOVDD +2	V
		Standard GPIO pins	-0.3	—	IOVDD+0.3	V
Voltage on HFXO pins	$V_{HFXOPIN}$		-0.3	—	1.4	V
Input RF level on pins 2G4RF_IOP and 2G4RF_ION	$P_{RFMAX2G4}$		—	—	10	dBm
Voltage differential between RF pins (2G4RF_IOP - 2G4RF_ION)	$V_{MAXDIFF2G4}$		-50	—	50	mV
Absolute voltage on RF pins 2G4RF_IOP and 2G4RF_ION	V_{MAX2G4}		-0.3	—	3.8	V
Absolute voltage on Sub-GHz RF pins	$V_{MAXSUBG}$	Pins SUBGRF_OP and SUBGRF_ON	-0.3	—	3.8	V
		Pins SUBGRF_IP and SUBGRF_IN,	-0.3	—	0.3	V
Total current into VDD power lines	I_{VDDMAX}	Source	—	—	200	mA
Total current into VSS ground lines	I_{VSSMAX}	Sink	—	—	200	mA
Current per I/O pin	I_{IOMAX}	Sink	—	—	50	mA
		Source	—	—	50	mA
Current for all I/O pins	$I_{IOALLMAX}$	Sink	—	—	200	mA
		Source	—	—	200	mA
Junction temperature	T_J	-G grade devices	-40	—	105	°C
		-I grade devices	-40	—	125	°C

Parameter	Symbol	Test Condition	Min	Typ	Max	Unit

Note:

1. When a GPIO pin is routed to the analog block through the APORT, the maximum voltage = IOVDD.
2. Valid for IOVDD in valid operating range or when IOVDD is undriven (high-Z). If IOVDD is connected to a low-impedance source below the valid operating range (e.g. IOVDD shorted to VSS), the pin voltage maximum is IOVDD + 0.3 V, to avoid exceeding the maximum IO current specifications.
3. To operate above the IOVDD supply rail, over-voltage tolerance must be enabled according to the GPIO_Px_OVTDIS register. Pins with over-voltage tolerance disabled have the same limits as Standard GPIO.

4.1.2 Operating Conditions

When assigning supply sources, the following requirements must be observed:

- VREGVDD must be greater than or equal to AVDD, DVDD, RFVDD, PAVDD and all IOVDD supplies.
- VREGVDD = AVDD
- DVDD ≤ AVDD
- IOVDD ≤ AVDD
- RFVDD ≤ AVDD
- PAVDD ≤ AVDD

4.1.2.1 General Operating Conditions

Table 4.2. General Operating Conditions

Parameter	Symbol	Test Condition	Min	Typ	Max	Unit
Operating ambient temperature range[1]	T_A	-G temperature grade	-40	25	85	°C
		-I temperature grade	-40	25	125	°C
AVDD supply voltage[2]	V_{AVDD}		1.8	3.3	3.8	V
VREGVDD operating supply voltage[2 3]	$V_{VREGVDD}$	DCDC in regulation	2.4	3.3	3.8	V
		DCDC in bypass, 50mA load	1.8	3.3	3.8	V
		DCDC not in use. DVDD externally shorted to VREGVDD	1.8	3.3	3.8	V
VREGVDD current	$I_{VREGVDD}$	DCDC in bypass, T ≤ 85 °C	—	—	200	mA
		DCDC in bypass, T > 85 °C	—	—	100	mA
RFVDD operating supply voltage	V_{RFVDD}		1.62	—	$V_{VREGVDD}$	V
DVDD operating supply voltage	V_{DVDD}		1.62	—	$V_{VREGVDD}$	V
PAVDD operating supply voltage	V_{PAVDD}		1.62	—	$V_{VREGVDD}$	V
IOVDD operating supply voltage	V_{IOVDD}	All IOVDD pins[4]	1.62	—	$V_{VREGVDD}$	V
DECOUPLE output capacitor[5 6]	$C_{DECOUPLE}$		0.75	1.0	2.75	µF
Difference between AVDD and VREGVDD, ABS(AVDD-VREGVDD)[2]	dV_{DD}		—	—	0.1	V
HFCORECLK frequency	f_{CORE}	VSCALE2, MODE = WS1	—	—	40	MHz
		VSCALE2, MODE = WS0	—	—	25	MHz
		VSCALE0, MODE = WS2	—	—	20	MHz
		VSCALE0, MODE = WS1	—	—	14	MHz
		VSCALE0, MODE = WS0	—	—	7	MHz
HFCLK frequency	f_{HFCLK}	VSCALE2	—	—	40	MHz
		VSCALE0	—	—	20	MHz

Parameter	Symbol	Test Condition	Min	Typ	Max	Unit

Note:

1. The maximum limit on T_A may be lower due to device self-heating, which depends on the power dissipation of the specific application. T_A (max) = T_J (max) - ($THETA_{JA}$ x PowerDissipation). Refer to the Absolute Maximum Ratings table and the Thermal Characteristics table for T_J and $THETA_{JA}$.
2. VREGVDD must be tied to AVDD. Both VREGVDD and AVDD minimum voltages must be satisfied for the part to operate.
3. The minimum voltage required in bypass mode is calculated using R_{BYP} from the DCDC specification table. Requirements for other loads can be calculated as $V_{DVDD_min}+I_{LOAD} * R_{BYP_max}$.
4. When the CSEN peripheral is used with chopping enabled (CSEN_CTRL_CHOPEN = ENABLE), IOVDD must be equal to AVDD.
5. The system designer should consult the characteristic specs of the capacitor used on DECOUPLE to ensure its capacitance value stays within the specified bounds across temperature and DC bias.
6. VSCALE0 to VSCALE2 voltage change transitions occur at a rate of 10 mV / usec for approximately 20 usec. During this transition, peak currents will be dependent on the value of the DECOUPLE output capacitor, from 35 mA (with a 1 µF capacitor) to 70 mA (with a 2.7 µF capacitor).

4.1.3 Thermal Characteristics

Table 4.3. Thermal Characteristics

Parameter	Symbol	Test Condition	Min	Typ	Max	Unit
Thermal resistance, QFN48 Package	$THETA_{JA_QFN48}$	2-Layer PCB, Air velocity = 0 m/s	—	75.7	—	°C/W
		2-Layer PCB, Air velocity = 1 m/s	—	61.5	—	°C/W
		2-Layer PCB, Air velocity = 2 m/s	—	55.4	—	°C/W
		4-Layer PCB, Air velocity = 0 m/s	—	30.2	—	°C/W
		4-Layer PCB, Air velocity = 1 m/s	—	26.3	—	°C/W
		4-Layer PCB, Air velocity = 2 m/s	—	24.9	—	°C/W
Thermal resistance, BGA125 Package	$THETA_{JA_BGA125}$	2-Layer PCB, Air velocity = 0 m/s	—	90.7	—	°C/W
		2-Layer PCB, Air velocity = 1 m/s	—	73.7	—	°C/W
		2-Layer PCB, Air velocity = 2 m/s	—	66.4	—	°C/W
		4-Layer PCB, Air velocity = 0 m/s	—	45	—	°C/W
		4-Layer PCB, Air velocity = 1 m/s	—	39.6	—	°C/W
		4-Layer PCB, Air velocity = 2 m/s	—	37.6	—	°C/W
Thermal resistance, QFN68 Package	$THETA_{JA_QFN68}$	4-Layer PCB, Air velocity = 0 m/s	—	21.5	—	°C/W
		4-Layer PCB, Air velocity = 1 m/s	—	18.9	—	°C/W
		4-Layer PCB, Air velocity = 2 m/s	—	17.1	—	°C/W

4.1.4 DC-DC Converter

Test conditions: L_DCDC=4.7 µH (Murata LQH3NPN4R7MM0L), C_DCDC=4.7 µF (Samsung CL10B475KQ8NQNC), V_DCDC_I=3.3 V, V_DCDC_O=1.8 V, I_DCDC_LOAD=50 mA, Heavy Drive configuration, F_DCDC_LN=7 MHz, unless otherwise indicated.

Table 4.4. DC-DC Converter

Parameter	Symbol	Test Condition	Min	Typ	Max	Unit
Input voltage range	V_{DCDC_I}	Bypass mode, I_{DCDC_LOAD} = 50 mA	1.8	—	$V_{VREGVDD_MAX}$	V
		Low noise (LN) mode, 1.8 V output, I_{DCDC_LOAD} = 100 mA, or Low power (LP) mode, 1.8 V output, I_{DCDC_LOAD} = 10 mA	2.4	—	$V_{VREGVDD_MAX}$	V
		Low noise (LN) mode, 1.8 V output, I_{DCDC_LOAD} = 200 mA	2.6	—	$V_{VREGVDD_MAX}$	V
Output voltage programmable range[1]	V_{DCDC_O}		1.8	—	$V_{VREGVDD}$	V
Regulation DC accuracy	ACC_{DC}	Low Noise (LN) mode, 1.8 V target output	1.7	—	1.9	V
Regulation window[2]	WIN_{REG}	Low Power (LP) mode, LPCMPBIASEMxx[3] = 0, 1.8 V target output, I_{DCDC_LOAD} ≤ 75 µA	1.63	—	2.2	V
		Low Power (LP) mode, LPCMPBIASEMxx[3] = 3, 1.8 V target output, I_{DCDC_LOAD} ≤ 10 mA	1.63	—	2.1	V
Steady-state output ripple	V_R	Radio disabled	—	3	—	mVpp
Output voltage under/overshoot	V_{OV}	CCM Mode (LNFORCECCM[3] = 1), Load changes between 0 mA and 100 mA	—	25	60	mV
		DCM Mode (LNFORCECCM[3] = 0), Load changes between 0 mA and 10 mA	—	45	90	mV
		Overshoot during LP to LN CCM/DCM mode transitions compared to DC level in LN mode	—	200	—	mV
		Undershoot during BYP/LP to LN CCM (LNFORCECCM[3] = 1) mode transitions compared to DC level in LN mode	—	40	—	mV
		Undershoot during BYP/LP to LN DCM (LNFORCECCM[3] = 0) mode transitions compared to DC level in LN mode	—	100	—	mV
DC line regulation	V_{REG}	Input changes between $V_{VREGVDD_MAX}$ and 2.4 V	—	0.1	—	%
DC load regulation	I_{REG}	Load changes between 0 mA and 100 mA in CCM mode	—	0.1	—	%

Parameter	Symbol	Test Condition	Min	Typ	Max	Unit
Max load current	I_{LOAD_MAX}	Low noise (LN) mode, Heavy Drive[4], T ≤ 85 °C	—	—	200	mA
		Low noise (LN) mode, Heavy Drive[4], T > 85 °C	—	—	100	mA
		Low noise (LN) mode, Medium Drive[4]	—	—	100	mA
		Low noise (LN) mode, Light Drive[4]	—	—	50	mA
		Low power (LP) mode, LPCMPBIASEMxx[3] = 0	—	—	75	µA
		Low power (LP) mode, LPCMPBIASEMxx[3] = 3	—	—	10	mA
DCDC nominal output capacitor[5]	C_{DCDC}	25% tolerance	1	4.7	4.7	µF
DCDC nominal output inductor	L_{DCDC}	20% tolerance	4.7	4.7	4.7	µH
Resistance in Bypass mode	R_{BYP}		—	1.2	2.5	Ω

Note:

1. Due to internal dropout, the DC-DC output will never be able to reach its input voltage, $V_{VREGVDD}$.
2. LP mode controller is a hysteretic controller that maintains the output voltage within the specified limits.
3. LPCMPBIASEMxx refers to either LPCMPBIASEM234H in the EMU_DCDCMISCCTRL register or LPCMPBIASEM01 in the EMU_DCDCLOEM01CFG register, depending on the energy mode.
4. Drive levels are defined by configuration of the PFETCNT and NFETCNT registers. Light Drive: PFETCNT=NFETCNT=3; Medium Drive: PFETCNT=NFETCNT=7; Heavy Drive: PFETCNT=NFETCNT=15.
5. Output voltage under/over-shoot and regulation are specified with C_{DCDC} 4.7 µF. Different settings for DCDCLNCOMPCTRL must be used if C_{DCDC} is lower than 4.7 µF. See Application Note AN0948 for details.

4.1.5 Current Consumption

4.1.5.1 Current Consumption 3.3 V without DC-DC Converter

Unless otherwise indicated, typical conditions are: VREGVDD = AVDD = DVDD = RFVDD = PAVDD = 3.3 V. T = 25 °C. DCDC is off. Minimum and maximum values in this table represent the worst conditions across process variation at T = 25 °C.

Table 4.5. Current Consumption 3.3 V without DC-DC Converter

Parameter	Symbol	Test Condition	Min	Typ	Max	Unit
Current consumption in EM0 mode with all peripherals disabled	I_{ACTIVE}	38.4 MHz crystal, CPU running while loop from flash[1]	—	130	—	µA/MHz
		38 MHz HFRCO, CPU running Prime from flash	—	99	—	µA/MHz
		38 MHz HFRCO, CPU running while loop from flash	—	99	105	µA/MHz
		38 MHz HFRCO, CPU running CoreMark from flash	—	124	—	µA/MHz
		26 MHz HFRCO, CPU running while loop from flash	—	102	108	µA/MHz
		1 MHz HFRCO, CPU running while loop from flash	—	280	435	µA/MHz
Current consumption in EM0 mode with all peripherals disabled and voltage scaling enabled	I_{ACTIVE_VS}	19 MHz HFRCO, CPU running while loop from flash	—	88	—	µA/MHz
		1 MHz HFRCO, CPU running while loop from flash	—	234	—	µA/MHz
Current consumption in EM1 mode with all peripherals disabled	I_{EM1}	38.4 MHz crystal[1]	—	80	—	µA/MHz
		38 MHz HFRCO	—	50	54	µA/MHz
		26 MHz HFRCO	—	52	58	µA/MHz
		1 MHz HFRCO	—	230	400	µA/MHz
Current consumption in EM1 mode with all peripherals disabled and voltage scaling enabled	I_{EM1_VS}	19 MHz HFRCO	—	47	—	µA/MHz
		1 MHz HFRCO	—	193	—	µA/MHz
Current consumption in EM2 mode, with voltage scaling enabled	I_{EM2_VS}	Full 256 kB RAM retention and RTCC running from LFXO	—	2.9	—	µA
		Full 256 kB RAM retention and RTCC running from LFRCO	—	3.2	—	µA
		16 kB (1 bank) RAM retention and RTCC running from LFRCO[2]	—	2.1	3.5	µA
Current consumption in EM3 mode, with voltage scaling enabled	I_{EM3_VS}	Full 256 kB RAM retention and CRYOTIMER running from ULFRCO	—	2.56	4.8	µA
Current consumption in EM4H mode, with voltage scaling enabled	I_{EM4H_VS}	128 byte RAM retention, RTCC running from LFXO	—	1.0	—	µA
		128 byte RAM retention, CRYOTIMER running from ULFRCO	—	0.45	—	µA
		128 byte RAM retention, no RTCC	—	0.43	0.9	µA

Parameter	Symbol	Test Condition	Min	Typ	Max	Unit
Current consumption in EM4S mode	I_{EM4S}	No RAM retention, no RTCC	—	0.04	0.1	µA

Note:

1. CMU_HFXOCTRL_LOWPOWER=0.
2. CMU_LFRCOCTRL_ENVREF = 1, CMU_LFRCOCTRL_VREFUPDATE = 1

4.1.5.2 Current Consumption 3.3 V using DC-DC Converter

Unless otherwise indicated, typical conditions are: VREGVDD = AVDD = IOVDD = 3.3 V, DVDD = RFVDD = PAVDD = 1.8 V DC-DC output. T = 25 °C. Minimum and maximum values in this table represent the worst conditions across process variation at T = 25 °C.

Table 4.6. Current Consumption 3.3 V using DC-DC Converter

Parameter	Symbol	Test Condition	Min	Typ	Max	Unit
Current consumption in EM0 mode with all peripherals disabled, DCDC in Low Noise DCM mode[1]	I_{ACTIVE_DCM}	38.4 MHz crystal, CPU running while loop from flash[2]	—	88	—	µA/MHz
		38 MHz HFRCO, CPU running Prime from flash	—	70	—	µA/MHz
		38 MHz HFRCO, CPU running while loop from flash	—	70	—	µA/MHz
		38 MHz HFRCO, CPU running CoreMark from flash	—	85	—	µA/MHz
		26 MHz HFRCO, CPU running while loop from flash	—	77	—	µA/MHz
		1 MHz HFRCO, CPU running while loop from flash	—	636	—	µA/MHz
Current consumption in EM0 mode with all peripherals disabled, DCDC in Low Noise CCM mode[3]	I_{ACTIVE_CCM}	38.4 MHz crystal, CPU running while loop from flash[2]	—	98	—	µA/MHz
		38 MHz HFRCO, CPU running Prime from flash	—	81	—	µA/MHz
		38 MHz HFRCO, CPU running while loop from flash	—	82	—	µA/MHz
		38 MHz HFRCO, CPU running CoreMark from flash	—	95	—	µA/MHz
		26 MHz HFRCO, CPU running while loop from flash	—	95	—	µA/MHz
		1 MHz HFRCO, CPU running while loop from flash	—	1155	—	µA/MHz
Current consumption in EM0 mode with all peripherals disabled and voltage scaling enabled, DCDC in Low Noise CCM mode[3]	$I_{ACTIVE_CCM_VS}$	19 MHz HFRCO, CPU running while loop from flash	—	101	—	µA/MHz
		1 MHz HFRCO, CPU running while loop from flash	—	1128	—	µA/MHz
Current consumption in EM1 mode with all peripherals disabled, DCDC in Low Noise DCM mode[1]	I_{EM1_DCM}	38.4 MHz crystal[2]	—	59	—	µA/MHz
		38 MHz HFRCO	—	41	—	µA/MHz
		26 MHz HFRCO	—	48	—	µA/MHz
		1 MHz HFRCO	—	610	—	µA/MHz
Current consumption in EM1 mode with all peripherals disabled and voltage scaling enabled, DCDC in Low Noise DCM mode[1]	$I_{EM1_DCM_VS}$	19 MHz HFRCO	—	52	—	µA/MHz
		1 MHz HFRCO	—	587	—	µA/MHz

Parameter	Symbol	Test Condition	Min	Typ	Max	Unit
Current consumption in EM2 mode, with voltage scaling enabled, DCDC in LP mode[4]	I_{EM2_VS}	Full 256 kB RAM retention and RTCC running from LFXO	—	2.1	—	µA
		Full 256 kB RAM retention and RTCC running from LFRCO	—	2.2	—	µA
		16 kB (1 bank) RAM retention and RTCC running from LFRCO[5]	—	1.5	—	µA
Current consumption in EM3 mode, with voltage scaling enabled	I_{EM3_VS}	Full 256 kB RAM retention and CRYOTIMER running from ULFRCO	—	1.81	—	µA
Current consumption in EM4H mode, with voltage scaling enabled	I_{EM4H_VS}	128 byte RAM retention, RTCC running from LFXO	—	0.69	—	µA
		128 byte RAM retention, CRYOTIMER running from ULFRCO	—	0.39	—	µA
		128 byte RAM retention, no RTCC	—	0.39	—	µA
Current consumption in EM4S mode	I_{EM4S}	No RAM retention, no RTCC	—	0.06	—	µA

Note:

1. DCDC Low Noise DCM Mode = Light Drive (PFETCNT=NFETCNT=3), F=3.0 MHz (RCOBAND=0), ANASW=DVDD.
2. CMU_HFXOCTRL_LOWPOWER=0.
3. DCDC Low Noise CCM Mode = Light Drive (PFETCNT=NFETCNT=3), F=6.4 MHz (RCOBAND=4), ANASW=DVDD.
4. DCDC Low Power Mode = Medium Drive, LPOSCDIV=1, LPCMPBIASEM234H=0, LPCLIMILIMSEL=1, ANASW=DVDD.
5. CMU_LFRCOCTRL_ENVREF = 1, CMU_LFRCOCTRL_VREFUPDATE = 1

4.1.5.3 Current Consumption 1.8 V without DC-DC Converter

Unless otherwise indicated, typical conditions are: VREGVDD = AVDD = DVDD = RFVDD = PAVDD = 1.8 V. T = 25 °C. DCDC is off. Minimum and maximum values in this table represent the worst conditions across process variation at T = 25 °C.

Table 4.7. Current Consumption 1.8 V without DC-DC Converter

Parameter	Symbol	Test Condition	Min	Typ	Max	Unit
Current consumption in EM0 mode with all peripherals disabled	I_{ACTIVE}	38.4 MHz crystal, CPU running while loop from flash[1]	—	130	—	µA/MHz
		38 MHz HFRCO, CPU running Prime from flash	—	99	—	µA/MHz
		38 MHz HFRCO, CPU running while loop from flash	—	99	—	µA/MHz
		38 MHz HFRCO, CPU running CoreMark from flash	—	124	—	µA/MHz
		26 MHz HFRCO, CPU running while loop from flash	—	102	—	µA/MHz
		1 MHz HFRCO, CPU running while loop from flash	—	277	—	µA/MHz
Current consumption in EM0 mode with all peripherals disabled and voltage scaling enabled	I_{ACTIVE_VS}	19 MHz HFRCO, CPU running while loop from flash	—	87	—	µA/MHz
		1 MHz HFRCO, CPU running while loop from flash	—	231	—	µA/MHz
Current consumption in EM1 mode with all peripherals disabled	I_{EM1}	38.4 MHz crystal[1]	—	80	—	µA/MHz
		38 MHz HFRCO	—	50	—	µA/MHz
		26 MHz HFRCO	—	52	—	µA/MHz
		1 MHz HFRCO	—	227	—	µA/MHz
Current consumption in EM1 mode with all peripherals disabled and voltage scaling enabled	I_{EM1_VS}	19 MHz HFRCO	—	47	—	µA/MHz
		1 MHz HFRCO	—	190	—	µA/MHz
Current consumption in EM2 mode, with voltage scaling enabled	I_{EM2_VS}	Full 256 kB RAM retention and RTCC running from LFXO	—	2.8	—	µA
		Full 256 kB RAM retention and RTCC running from LFRCO	—	3.0	—	µA
		16 kB (1 bank) RAM retention and RTCC running from LFRCO[2]	—	1.9	—	µA
Current consumption in EM3 mode, with voltage scaling enabled	I_{EM3_VS}	Full 256 kB RAM retention and CRYOTIMER running from ULFRCO	—	2.47	—	µA
Current consumption in EM4H mode, with voltage scaling enabled	I_{EM4H_VS}	128 byte RAM retention, RTCC running from LFXO	—	0.91	—	µA
		128 byte RAM retention, CRYOTIMER running from ULFRCO	—	0.35	—	µA
		128 byte RAM retention, no RTCC	—	0.35	—	µA
Current consumption in EM4S mode	I_{EM4S}	No RAM retention, no RTCC	—	0.04	—	µA

Parameter	Symbol	Test Condition	Min	Typ	Max	Unit

Note:

1. CMU_HFXOCTRL_LOWPOWER=0.
2. CMU_LFRCOCTRL_ENVREF = 1, CMU_LFRCOCTRL_VREFUPDATE = 1

4.1.5.4 Current Consumption Using Radio 3.3 V with DC-DC

Unless otherwise indicated, typical conditions are: VREGVDD = AVDD = IOVDD = 3.3 V, DVDD = RFVDD = PAVDD = 1.8 V. T = 25 °C. Minimum and maximum values in this table represent the worst conditions across process variation at T = 25 °C.

Table 4.8. Current Consumption Using Radio 3.3 V with DC-DC

Parameter	Symbol	Test Condition	Min	Typ	Max	Unit
Current consumption in receive mode, active packet reception (MCU in EM1 @ 38.4 MHz, peripheral clocks disabled), T ≤ 85 °C	I_{RX_ACTIVE}	500 kbit/s, 2GFSK, F = 915 MHz, Radio clock prescaled by 4	—	9.3	10.2	mA
		38.4 kbit/s, 2GFSK, F = 868 MHz, Radio clock prescaled by 4	—	8.6	10.2	mA
		38.4 kbit/s, 2GFSK, F = 490 MHz, Radio clock prescaled by 4	—	8.6	10.2	mA
		50 kbit/s, 2GFSK, F = 433 MHz, Radio clock prescaled by 4	—	8.6	10.2	mA
		38.4 kbit/s, 2GFSK, F = 315 MHz, Radio clock prescaled by 4	—	8.6	10.2	mA
		38.4 kbit/s, 2GFSK, F = 169 MHz, Radio clock prescaled by 4	—	8.4	10.2	mA
		1 Mbit/s, 2GFSK, F = 2.4 GHz, Radio clock prescaled by 4	—	10.0	—	mA
		2 Mbit/s, 2GFSK, F = 2.4 GHz, Radio clock prescaled by 4	—	11.5	—	mA
		802.15.4 receiving frame, F = 2.4 GHz, Radio clock prescaled by 3	—	11	—	mA
Current consumption in receive mode, active packet reception (MCU in EM1 @ 38.4 MHz, peripheral clocks disabled), T > 85 °C	$I_{RX_ACTIVE_HT}$	500 kbit/s, 2GFSK, F = 915 MHz, Radio clock prescaled by 4	—	—	13	mA
		38.4 kbit/s, 2GFSK, F = 868 MHz, Radio clock prescaled by 4	—	—	13	mA
		38.4 kbit/s, 2GFSK, F = 490 MHz, Radio clock prescaled by 4	—	—	13	mA
		50 kbit/s, 2GFSK, F = 433 MHz, Radio clock prescaled by 4	—	—	13	mA
		38.4 kbit/s, 2GFSK, F = 315 MHz, Radio clock prescaled by 4	—	—	13	mA
		38.4 kbit/s, 2GFSK, F = 169 MHz, Radio clock prescaled by 4	—	—	13	mA

Parameter	Symbol	Test Condition	Min	Typ	Max	Unit
Current consumption in receive mode, listening for packet (MCU in EM1 @ 38.4 MHz, peripheral clocks disabled), T ≤ 85 °C	I_{RX_LISTEN}	500 kbit/s, 2GFSK, F = 915 MHz, No radio clock prescaling	—	10.2	11	mA
		38.4 kbit/s, 2GFSK, F = 868 MHz, No radio clock prescaling	—	9.5	11	mA
		38.4 kbit/s, 2GFSK, F = 490 MHz, No radio clock prescaling	—	9.5	11	mA
		50 kbit/s, 2GFSK, F = 433 MHz, No radio clock prescaling	—	9.5	11	mA
		38.4 kbit/s, 2GFSK, F = 315 MHz, No radio clock prescaling	—	9.4	11	mA
		38.4 kbit/s, 2GFSK, F = 169 MHz, No radio clock prescaling	—	9.3	11	mA
		1 Mbit/s, 2GFSK, F = 2.4 GHz, No radio clock prescaling	—	10.9	—	mA
		2 Mbit/s, 2GFSK, F = 2.4 GHz, No radio clock prescaling	—	11.9	—	mA
		802.15.4, F = 2.4 GHz, No radio clock prescaling	—	12.5	—	mA
Current consumption in receive mode, listening for packet (MCU in EM1 @ 38.4 MHz, peripheral clocks disabled), T > 85 °C	$I_{RX_LISTEN_HT}$	500 kbit/s, 2GFSK, F = 915 MHz, No radio clock prescaling	—	—	14	mA
		38.4 kbit/s, 2GFSK, F = 868 MHz, No radio clock prescaling	—	—	14	mA
		38.4 kbit/s, 2GFSK, F = 490 MHz, No radio clock prescaling	—	—	14	mA
		50 kbit/s, 2GFSK, F = 433 MHz, No radio clock prescaling	—	—	14	mA
		38.4 kbit/s, 2GFSK, F = 315 MHz, No radio clock prescaling	—	—	14	mA
		38.4 kbit/s, 2GFSK, F = 169 MHz, No radio clock prescaling	—	—	14	mA

Parameter	Symbol	Test Condition	Min	Typ	Max	Unit
Current consumption in transmit mode (MCU in EM1 @ 38.4 MHz, peripheral clocks disabled), T ≤ 85 °C	I_{TX}	F = 915 MHz, CW, 20 dBm match, External PA supply = 3.3V	—	90.2	134.3	mA
		F = 915 MHz, CW, 14 dBm match, External PA supply connected to DCDC output	—	36	42.5	mA
		F = 868 MHz, CW, 20 dBm match, External PA supply = 3.3V	—	79.7	106.7	mA
		F = 868 MHz, CW, 14 dBm match, External PA supply connected to DCDC output	—	35.3	41	mA
		F = 490 MHz, CW, 20 dBm match, External PA supply = 3.3V	—	93.8	125.4	mA
		F = 433 MHz, CW, 10 dBm match, External PA supply connected to DC-DC output	—	20.3	24	mA
		F = 433 MHz, CW, 14 dBm match, External PA supply connected to DCDC output	—	34	41.5	mA
		F = 315 MHz, CW, 14 dBm match, External PA supply connected to DCDC output	—	33.5	42	mA
		F = 169 MHz, CW, 20 dBm match, External PA supply = 3.3V	—	88.6	116.7	mA
		F = 2.4 GHz, CW, 0 dBm output power, Radio clock prescaled by 3	—	8.5	—	mA
		F = 2.4 GHz, CW, 0 dBm output power, Radio clock prescaled by 1	—	9.5	—	mA
		F = 2.4 GHz, CW, 3 dBm output power	—	16.5	—	mA
		F = 2.4 GHz, CW, 8 dBm output power	—	26	—	mA
		F = 2.4 GHz, CW, 10.5 dBm output power	—	34	—	mA
		F = 2.4 GHz, CW, 16.5 dBm output power, PAVDD connected directly to external 3.3V supply	—	86	—	mA
		F = 2.4 GHz, CW, 19.5 dBm output power, PAVDD connected directly to external 3.3V supply	—	131	—	mA

Parameter	Symbol	Test Condition	Min	Typ	Max	Unit
Current consumption in transmit mode (MCU in EM1 @ 38.4 MHz, peripheral clocks disabled), T > 85 °C	I_{TX_HT}	F = 915 MHz, CW, 20 dBm match, External PA supply = 3.3V	—	—	134.3	mA
		F = 915 MHz, CW, 14 dBm match, External PA supply connected to DCDC output	—	—	42.5	mA
		F = 868 MHz, CW, 20 dBm match, External PA supply = 3.3V	—	—	109.8	mA
		F = 868 MHz, CW, 14 dBm match, External PA supply connected to DCDC output	—	—	41.3	mA
		F = 490 MHz, CW, 20 dBm match, External PA supply = 3.3V	—	—	130.8	mA
		F = 433 MHz, CW, 10 dBm match, External PA supply connected to DC-DC output	—	—	24.4	mA
		F = 433 MHz, CW, 14 dBm match, External PA supply connected to DCDC output	—	—	41.5	mA
		F = 315 MHz, CW, 14 dBm match, External PA supply connected to DCDC output	—	—	42	mA
		F = 169 MHz, CW, 20 dBm match, External PA supply = 3.3V	—	—	122.8	mA

4.1.6 Wake Up Times

Table 4.9. Wake Up Times

Parameter	Symbol	Test Condition	Min	Typ	Max	Unit
Wake up time from EM1	t_{EM1_WU}		—	3	—	AHB Clocks
Wake up from EM2	t_{EM2_WU}	Code execution from flash	—	10.1	—	µs
		Code execution from RAM	—	3.2	—	µs
Wake up from EM3	t_{EM3_WU}	Code execution from flash	—	10.1	—	µs
		Code execution from RAM	—	3.2	—	µs
Wake up from EM4H[1]	t_{EM4H_WU}	Executing from flash	—	80	—	µs
Wake up from EM4S[1]	t_{EM4S_WU}	Executing from flash	—	291	—	µs
Time from release of reset source to first instruction execution	t_{RESET}	Soft Pin Reset released	—	43	—	µs
		Any other reset released	—	350	—	µs
Power mode scaling time	t_{SCALE}	VSCALE0 to VSCALE2, HFCLK = 19 MHz[2] [3]	—	31.8	—	µs
		VSCALE2 to VSCALE0, HFCLK = 19 MHz[4]	—	4.3	—	µs

Note:

1. Time from wake up request until first instruction is executed. Wakeup results in device reset.
2. Scaling up from VSCALE0 to VSCALE2 requires approximately 30.3 µs + 28 HFCLKs.
3. VSCALE0 to VSCALE2 voltage change transitions occur at a rate of 10 mV/µs for approximately 20 µs. During this transition, peak currents will be dependent on the value of the DECOUPLE output capacitor, from 35 mA (with a 1 µF capacitor) to 70 mA (with a 2.7 µF capacitor).
4. Scaling down from VSCALE2 to VSCALE0 requires approximately 2.8 µs + 29 HFCLKs.

4.1.7 Brown Out Detector (BOD)

Table 4.10. Brown Out Detector (BOD)

Parameter	Symbol	Test Condition	Min	Typ	Max	Unit
DVDD BOD threshold	$V_{DVDDBOD}$	DVDD rising	—	—	1.62	V
		DVDD falling (EM0/EM1)	1.35	—	—	V
		DVDD falling (EM2/EM3)	1.3	—	—	V
DVDD BOD hysteresis	$V_{DVDDBOD_HYST}$		—	18	—	mV
DVDD BOD response time	$t_{DVDDBOD_DELAY}$	Supply drops at 0.1V/µs rate	—	2.4	—	µs
AVDD BOD threshold	$V_{AVDDBOD}$	AVDD rising	—	—	1.8	V
		AVDD falling (EM0/EM1)	1.62	—	—	V
		AVDD falling (EM2/EM3)	1.53	—	—	V
AVDD BOD hysteresis	$V_{AVDDBOD_HYST}$		—	20	—	mV
AVDD BOD response time	$t_{AVDDBOD_DELAY}$	Supply drops at 0.1V/µs rate	—	2.4	—	µs
EM4 BOD threshold	$V_{EM4DBOD}$	AVDD rising	—	—	1.7	V
		AVDD falling	1.45	—	—	V
EM4 BOD hysteresis	V_{EM4BOD_HYST}		—	25	—	mV
EM4 BOD response time	t_{EM4BOD_DELAY}	Supply drops at 0.1V/µs rate	—	300	—	µs

4.1.8 Frequency Synthesizer

Table 4.11. Frequency Synthesizer

Parameter	Symbol	Test Condition	Min	Typ	Max	Unit
RF synthesizer frequency range	f_{RANGE}	2400 - 2483.5 MHz	2400	—	2483.5	MHz
		779 - 956 MHz	779	—	956	MHz
		584 - 717 MHz	584	—	717	MHz
		358 - 574 MHz	358	—	574	MHz
		191 - 358 MHz	191	—	358	MHz
		110 - 191 MHz	110	—	191	MHz
LO tuning frequency resolution with 38.4 MHz crystal	f_{RES}	2400 - 2483.5 MHz	—	—	73	Hz
		779 - 956 MHz	—	—	24	Hz
		584 - 717 MHz	—	—	18.3	Hz
		358 - 574 MHz	—	—	12.2	Hz
		191 - 358 MHz	—	—	7.3	Hz
		110 - 191 MHz	—	—	4.6	Hz
Frequency deviation resolution with 38.4 MHz crystal	df_{RES}	2400 - 2483.5 MHz	—	—	73	Hz
		779 - 956 MHz	—	—	24	Hz
		584 - 717 MHz	—	—	18.3	Hz
		358 - 574 MHz	—	—	12.2	Hz
		191 - 358 MHz	—	—	7.3	Hz
		110 - 191 MHz	—	—	4.6	Hz
Maximum frequency deviation with 38.4 MHz crystal	df_{MAX}	2400 - 2483.5 MHz	—	—	1677	kHz
		779 - 956 MHz	—	—	559	kHz
		584 - 717 MHz	—	—	419	kHz
		358 - 574 MHz	—	—	280	kHz
		191 - 358 MHz	—	—	167	kHz
		110 - 191 MHz	—	—	105	kHz

4.1.9 2.4 GHz RF Transceiver Characteristics

4.1.9.1 RF Transmitter General Characteristics for 2.4 GHz Band

Unless otherwise indicated, typical conditions are: T = 25 °C, VREGVDD = AVDD = IOVDD = 3.3 V, DVDD = RFVDD = PAVDD. RFVDD and PAVDD path is filtered using ferrites. Crystal frequency = 38.4 MHz. RF center frequency 2.45 GHz.

Table 4.12. RF Transmitter General Characteristics for 2.4 GHz Band

Parameter	Symbol	Test Condition	Min	Typ	Max	Unit
Maximum TX power[1]	$POUT_{MAX}$	19 dBm-rated part numbers. PAVDD connected directly to external 3.3V supply	—	19.5	—	dBm
Minimum active TX Power	$POUT_{MIN}$	CW		-30	—	dBm
Output power step size	$POUT_{STEP}$	-5 dBm< Output power < 0 dBm	—	1	—	dB
		0 dBm < output power < $POUT_{MAX}$	—	0.5	—	dB
Output power variation vs supply at $POUT_{MAX}$	$POUT_{VAR_V}$	1.8 V < $V_{VREGVDD}$ < 3.3 V, PAVDD connected directly to external supply, for output power > 10 dBm.	—	4.5	—	dB
		1.8 V < $V_{VREGVDD}$ < 3.3 V using DC-DC converter	—	2.2	—	dB
Output power variation vs temperature at $POUT_{MAX}$	$POUT_{VAR_T}$	From -40 to +85 °C, PAVDD connected to DC-DC output	—	1.5	—	dB
		From -40 to +125 °C, PAVDD connected to DC-DC output	—	2.2	—	dB
		From -40 to +85 °C, PAVDD connected to external supply	—	1.5	—	dB
		From -40 to +125 °C, PAVDD connected to external supply	—	3.4	—	dB
Output power variation vs RF frequency at $POUT_{MAX}$	$POUT_{VAR_F}$	Over RF tuning frequency range	—	0.4	—	dB
RF tuning frequency range	F_{RANGE}		2400	—	2483.5	MHz

Note:

1. Supported transmit power levels are determined by the ordering part number (OPN). Transmit power ratings for all devices covered in this datasheet can be found in the Max TX Power column of the Ordering Information Table.

4.1.9.2 RF Receiver General Characteristics for 2.4 GHz Band

Unless otherwise indicated, typical conditions are: T = 25 °C, VREGVDD = AVDD = IOVDD = 3.3 V, DVDD = RFVDD = PAVDD. RFVDD and PAVDD path is filtered using ferrites. Crystal frequency = 38.4 MHz. RF center frequency 2.45 GHz.

Table 4.13. RF Receiver General Characteristics for 2.4 GHz Band

Parameter	Symbol	Test Condition	Min	Typ	Max	Unit
RF tuning frequency range	F_{RANGE}		2400	—	2483.5	MHz
Receive mode maximum spurious emission	$SPUR_{RX}$	30 MHz to 1 GHz	—	-57	—	dBm
		1 GHz to 12 GHz	—	-47	—	dBm
Max spurious emissions during active receive mode, per FCC Part 15.109(a)	$SPUR_{RX_FCC}$	216 MHz to 960 MHz, Conducted Measurement	—	-55.2	—	dBm
		Above 960 MHz, Conducted Measurement	—	-47.2	—	dBm
Level above which RFSENSE will trigger[1]	$RFSENSE_{TRIG}$	CW at 2.45 GHz	—	-24	—	dBm
Level below which RFSENSE will not trigger[1]	$RFSENSE_{THRES}$	CW at 2.45 GHz	—	-50	—	dBm
1% PER sensitivity	$SENS_{2GFSK}$	2 Mbps 2GFSK signal	—	-89.6	—	dBm
		250 kbps 2GFSK signal	—	-100.7	—	dBm

Note:

1. RFSENSE performance is only valid from 0 to 85 °C. RFSENSE should be disabled outside this temperature range.

4.1.9.3 RF Transmitter Characteristics for 2GFSK in the 2.4GHz Band, 1 Mbps Data Rate

Unless otherwise indicated, typical conditions are: T = 25 °C, VREGVDD = AVDD = IOVDD = 3.3 V, DVDD = RFVDD = PAVDD. RFVDD and PAVDD path is filtered using ferrites. Crystal frequency = 38.4MHz. RF center frequency 2.45 GHz. Maximum duty cycle of 85%.

Table 4.14. RF Transmitter Characteristics for 2GFSK in the 2.4GHz Band, 1 Mbps Data Rate

Parameter	Symbol	Test Condition	Min	Typ	Max	Unit
Transmit 6dB bandwidth	TXBW	10 dBm	—	781	—	kHz
Power spectral density limit	PSD_{LIMIT}	Per FCC part 15.247 at 10 dBm	—	-8.4	—	dBm/ 3kHz
		Per FCC part 15.247 at 20 dBm	—	-0.4	—	dBm/ 3kHz
		Per ETSI 300.328 at 10 dBm/1 MHz	—	10.1	—	dBm
Occupied channel bandwidth per ETSI EN300.328	$OCP_{ETSI328}$	99% BW at highest and lowest channels in band, 10 dBm	—	1.1	—	MHz
Emissions of harmonics out-of-band, per FCC part 15.247	$SPUR_{HRM_FCC}$	2nd,3rd, 5, 6, 8, 9,10 harmonics; continuous transmission of modulated carrier	—	-47	—	dBm
Spurious emissions out-of-band, excluding harmonics captured in $SPUR_{HARM,FCC}$. Emissions taken at $POUT_{MAX}$, PAVDD connected to external 3.3 V supply	$SPUR_{OOB_FCC}$	Per FCC part 15.205/15.209, Above 2.483 GHz or below 2.4 GHz; continuous transmission of CW carrier, Restricted Bands[1 2]	—	-47	—	dBm
		Per FCC part 15.247, Above 2.483 GHz or below 2.4 GHz; continuous transmission of CW carrier, Non-Restricted Bands	—	-26	—	dBc
Spurious emissions out-of-band; per ETSI 300.328	$SPUR_{ETSI328}$	[2400-BW to 2400] MHz, [2483.5 to 2483.5+BW] MHz	—	-16	—	dBm
		[2400-2BW to 2400-BW] MHz, [2483.5+BW to 2483.5+2BW] MHz per ETSI 300.328	—	-26	—	dBm
Spurious emissions per ETSI EN300.440	$SPUR_{ETSI440}$	47-74 MHz,87.5-108 MHz, 174-230 MHz, 470-862 MHz	—	-60	—	dBm
		25-1000 MHz	—	-42	—	dBm
		1-12 GHz	—	-36	—	dBm

Note:

1. For 2476 MHz, 1.5 dB of power backoff is used to achieve this value.
2. For 2478 MHz, 4.2 dB of power backoff is used to achieve this value.

4.1.9.4 RF Receiver Characteristics for 2GFSK in the 2.4GHz Band, 1 Mbps Data Rate

Unless otherwise indicated, typical conditions are: T = 25 °C, VREGVDD = AVDD = IOVDD = 3.3 V, DVDD = RFVDD = PAVDD. RFVDD and PAVDD path is filtered using ferrites. Crystal frequency = 38.4MHz. RF center frequency 2.45 GHz.

Table 4.15. RF Receiver Characteristics for 2GFSK in the 2.4GHz Band, 1 Mbps Data Rate

Parameter	Symbol	Test Condition	Min	Typ	Max	Unit
Max usable receiver input level, 0.1% BER	SAT	Signal is reference signal[1]. Packet length is 20 bytes.	—	10	—	dBm
Sensitivity, 0.1% BER	SENS	Signal is reference signal[1]. Using DC-DC converter.	—	-94.8	—	dBm
Signal to co-channel interferer, 0.1% BER	C/I_{CC}	Desired signal 3 dB above reference sensitivity.	—	10.3	—	dB
N+1 adjacent channel selectivity, 0.1% BER, with allowable exceptions. Desired is reference signal at -67 dBm	C/I_{1+}	Interferer is reference signal at +1 MHz offset. Desired frequency 2402 MHz ≤ Fc ≤ 2480 MHz	—	-1.8	—	dB
N-1 adjacent channel selectivity, 0.1% BER, with allowable exceptions. Desired is reference signal at -67 dBm	C/I_{1-}	Interferer is reference signal at -1 MHz offset. Desired frequency 2402 MHz ≤ Fc ≤ 2480 MHz	—	-0.7	—	dB
Alternate selectivity, 0.1% BER, with allowable exceptions. Desired is reference signal at -67 dBm	C/I_2	Interferer is reference signal at ± 2 MHz offset. Desired frequency 2402 MHz ≤ Fc ≤ 2480 MHz, QFN48 and BGA125 packages.	—	-40.6	—	dB
		Interferer is reference signal at ± 2 MHz offset. Desired frequency 2402 MHz ≤ Fc ≤ 2480 MHz, QFN68 package.	—	-34.1	—	dB
Alternate selectivity, 0.1% BER, with allowable exceptions. Desired is reference signal at -67 dBm	C/I_3	Interferer is reference signal at ± 3 MHz offset. Desired frequency 2404 MHz ≤ Fc ≤ 2480 MHz	—	-46.2	—	dB
Selectivity to image frequency, 0.1% BER. Desired is reference signal at -67 dBm	C/I_{IM}	Interferer is reference signal at image frequency with 1 MHz precision	—	-38.1	—	dB
Selectivity to image frequency ± 1 MHz, 0.1% BER. Desired is reference signal at -67 dBm	C/I_{IM+1}	Interferer is reference signal at image frequency ± 1 MHz with 1 MHz precision	—	-46.5	—	dB
Blocking, less than 0.1% BER. Desired is -67dBm BLE reference signal at 2426MHz. Interferer is CW in OOB range[2]	$BLOCK_{OOB}$	Interferer frequency 30 MHz ≤ f ≤ 2000 MHz	-5	—	—	dBm
		Interferer frequency 2003 MHz ≤ f ≤ 2399 MHz	-24	—	—	dBm
		Interferer frequency 2484 MHz ≤ f ≤ 2997 MHz	-10	—	—	dBm
		Interferer frequency 3 GHz ≤ f ≤ 6 GHz	-10	—	—	dBm
		Interferer frequency 6 GHz ≤ f ≤ 12.75 GHz	-17	—	—	dBm

Parameter	Symbol	Test Condition	Min	Typ	Max	Unit

Note:

1. Reference signal is defined 2GFSK at -67 dBm, Modulation index = 0.5, BT = 0.5, Bit rate = 1 Mbps, desired data = PRBS9; interferer data = PRBS15; frequency accuracy better than 1 ppm.
2. Interferer max power limited by equipment capabilities and path loss. Minimum specified at 25 °C.

4.1.9.5 RF Transmitter Characteristics for 2GFSK in the 2.4GHz Band, 2 Mbps Data Rate

Unless otherwise indicated, typical conditions are: T = 25 °C, VREGVDD = AVDD = IOVDD = 3.3 V, DVDD = RFVDD = PAVDD. RFVDD and PAVDD path is filtered using ferrites. Crystal frequency = 38.4MHz. RF center frequency 2.45 GHz. Maximum duty cycle of 85%.

Table 4.16. RF Transmitter Characteristics for 2GFSK in the 2.4GHz Band, 2 Mbps Data Rate

Parameter	Symbol	Test Condition	Min	Typ	Max	Unit
Transmit 6dB bandwidth	TXBW	10 dBm	—	1404	—	kHz
Power spectral density limit	PSD_{LIMIT}	Per FCC part 15.247 at 10 dBm	—	-12.3	—	dBm/ 3kHz
		Per FCC part 15.247 at 20 dBm	—	-4.0	—	dBm/ 3kHz
		Per ETSI 300.328 at 10 dBm/1 MHz	—	11.3	—	dBm
Occupied channel bandwidth per ETSI EN300.328	$OCP_{ETSI328}$	99% BW at highest and lowest channels in band, 10 dBm	—	2.1	—	MHz
Emissions of harmonics out-of-band, per FCC part 15.247	$SPUR_{HRM_FCC}$	2nd,3rd, 5, 6, 8, 9,10 harmonics; continuous transmission of modulated carrier	—	-47	—	dBm
Spurious emissions out-of-band, excluding harmonics captured in $SPUR_{HARM,FCC}$. Emissions taken at $POUT_{MAX}$, PAVDD connected to external 3.3 V supply	$SPUR_{OOB_FCC}$	Per FCC part 15.205/15.209, Above 2.483 GHz or below 2.4 GHz; continuous transmission of CW carrier, Restricted Bands[1 2 3 4]	—	-47	—	dBm
		Per FCC part 15.247, Above 2.483 GHz or below 2.4 GHz; continuous transmission of CW carrier, Non-Restricted Bands	—	-26	—	dBc
Spurious emissions out-of-band; per ETSI 300.328	$SPUR_{ETSI328}$	[2400-BW to 2400] MHz, [2483.5 to 2483.5+BW] MHz	—	-16	—	dBm
		[2400-2BW to 2400-BW] MHz, [2483.5+BW to 2483.5+2BW] MHz per ETSI 300.328	—	-26	—	dBm
Spurious emissions per ETSI EN300.440	$SPUR_{ETSI440}$	47-74 MHz,87.5-108 MHz, 174-230 MHz, 470-862 MHz	—	-60	—	dBm
		25-1000 MHz	—	-42	—	dBm
		1-12 GHz	—	-36	—	dBm

Note:

1. For 2472 MHz, 1.3 dB of power backoff is used to achieve this value.
2. For 2474 MHz, 3.8 dB of power backoff is used to achieve this value.
3. For 2476 MHz, 7 dB of power backoff is used to achieve this value.
4. For 2478 MHz, 11.2 dB of power backoff is used to achieve this value.

4.1.9.6 RF Receiver Characteristics for 2GFSK in the 2.4GHz Band, 2 Mbps Data Rate

Unless otherwise indicated, typical conditions are: T = 25 °C, VREGVDD = AVDD = IOVDD = 3.3 V, DVDD = RFVDD = PAVDD. RFVDD and PAVDD path is filtered using ferrites. Crystal frequency = 38.4MHz. RF center frequency 2.45 GHz[1].

Table 4.17. RF Receiver Characteristics for 2GFSK in the 2.4GHz Band, 2 Mbps Data Rate

Parameter	Symbol	Test Condition	Min	Typ	Max	Unit
Max usable receiver input level, 0.1% BER	SAT	Signal is reference signal[2]. Packet length is 20 bytes.	—	10	—	dBm
Sensitivity, 0.1% BER	SENS	Signal is reference signal[2]. Using DC-DC converter. QFN48 and BGA125 packages.	—	-91.3	—	dBm
		Signal is reference signal[2]. Using DC-DC converter. QFN68 package.	—	-91.3	—	dBm
Signal to co-channel interferer, 0.1% BER	C/I_{CC}	Desired signal 3 dB above reference sensitivity.	—	7.3	—	dB
N+1 adjacent channel selectivity, 0.1% BER, with allowable exceptions. Desired is reference signal at -67 dBm	C/I_{1+}	Interferer is reference signal at +2 MHz offset. Desired frequency 2402 MHz ≤ Fc ≤ 2480 MHz	—	-10.4	—	dB
N-1 adjacent channel selectivity, 0.1% BER, with allowable exceptions. Desired is reference signal at -67 dBm	C/I_{1-}	Interferer is reference signal at -2 MHz offset. Desired frequency 2402 MHz ≤ Fc ≤ 2480 MHz	—	-13.9	—	dB
Alternate selectivity, 0.1% BER, with allowable exceptions. Desired is reference signal at -67 dBm	C/I_2	Interferer is reference signal at ± 4 MHz offset. Desired frequency 2402 MHz ≤ Fc ≤ 2480 MHz	—	-40.9	—	dB
Alternate selectivity, 0.1% BER, with allowable exceptions. Desired is reference signal at -67 dBm	C/I_3	Interferer is reference signal at ± 6 MHz offset. Desired frequency 2404 MHz ≤ Fc ≤ 2480 MHz	—	-43.7	—	dB
Selectivity to image frequency, 0.1% BER. Desired is reference signal at -67 dBm	C/I_{IM}	Interferer is reference signal at image frequency with 1 MHz precision	—	-10.4	—	dB
Selectivity to image frequency ± 2 MHz, 0.1% BER. Desired is reference signal at -67 dBm	C/I_{IM+1}	Interferer is reference signal at image frequency ± 2 MHz with 2 MHz precision	—	-40.9	—	dB

Note:

1. For the BLE 2Mbps in-band blocking performance, there may be up to 5 spurious response channels where the requirement of 30.8% PER is not met and therefore an exception will need to be taken for each of these frequencies to meet the requirements of the BLE standard.
2. Reference signal is defined 2GFSK at -67 dBm, Modulation index = 0.5, BT = 0.5, Bit rate = 2 Mbps, desired data = PRBS9; interferer data = PRBS15; frequency accuracy better than 1 ppm.

4.1.9.7 RF Transmitter Characteristics for 802.15.4 DSSS-OQPSK in the 2.4 GHz Band

Unless otherwise indicated, typical conditions are: T = 25 °C, VREGVDD = AVDD = IOVDD = 3.3 V, DVDD = RFVDD = PAVDD. RFVDD and PAVDD path is filtered using ferrites. Crystal frequency = 38.4 MHz. RF center frequency 2.45 GHz. Maximum duty cycle of 66%.

Table 4.18. RF Transmitter Characteristics for 802.15.4 DSSS-OQPSK in the 2.4 GHz Band

Parameter	Symbol	Test Condition	Min	Typ	Max	Unit
Error vector magnitude (offset EVM), per 802.15.4-2011	EVM	Average across frequency. Signal is DSSS-OQPSK reference packet[1]	—	3.8	—	% rms
Power spectral density limit	PSD_{LIMIT}	Relative, at carrier ± 3.5 MHz, output power at $POUT_{MAX}$	—	-26	—	dBc/100kHz
		Absolute, at carrier ± 3.5 MHz, output power at $POUT_{MAX}$[2]	—	-36	—	dBm/100kHz
		Per FCC part 15.247, output power at $POUT_{MAX}$	—	-4	—	dBm/3kHz
		ETSI	—	12.1	—	dBm
Occupied channel bandwidth per ETSI EN300.328	$OCP_{ETSI328}$	99% BW at highest and lowest channels in band	—	2.25	—	MHz
Spurious emissions of harmonics in restricted bands per FCC Part 15.205/15.209, Emissions taken at $POUT_{MAX}$, PAVDD connected to external 3.3 V supply, Test Frequency is 2450 MHz	$SPUR_{HRM_FCC_R}$	Continuous transmission of modulated carrier	—	-45.8	—	dBm
Spurious emissions of harmonics in non-restricted bands per FCC Part 15.247/15.35, Emissions taken at $POUT_{MAX}$, PAVDD connected to external 3.3 V supply, Test Frequency is 2450 MHz	$SPUR_{HRM_FCC_NRR}$	Continuous transmission of modulated carrier	—	-26	—	dBc
Spurious emissions out-of-band (above 2.483 GHz or below 2.4 GHz) in restricted bands, per FCC part 15.205/15.209, Emissions taken at $POUT_{MAX}$, PAVDD connected to external 3.3 V supply, Test Frequency = 2450 MHz	$SPUR_{OOB_FCC_R}$	Restricted bands 30-88 MHz; continuous transmission of modulated carrier	—	-61	—	dBm
		Restricted bands 88-216 MHz; continuous transmission of modulated carrier	—	-58	—	dBm
		Restricted bands 216-960 MHz; continuous transmission of modulated carrier	—	-55	—	dBm
		Restricted bands >960 MHz; continuous transmission of modulated carrier[3] [4]	—	-47	—	dBm

Parameter	Symbol	Test Condition	Min	Typ	Max	Unit
Spurious emissions out-of-band in non-restricted bands per FCC Part 15.247, Emissions taken at $POUT_{MAX}$, PAVDD connected to external 3.3 V supply, Test Frequency = 2450 MHz	$SPUR_{OOB_FCC_NR}$	Above 2.483 GHz or below 2.4 GHz; continuous transmission of modulated carrier	—	-26	—	dBc
Spurious emissions out-of-band; per ETSI 300.328[5]	$SPUR_{ETSI328}$	[2400-BW to 2400], [2483.5 to 2483.5+BW];	—	-16	—	dBm
		[2400-2BW to 2400-BW], [2483.5+BW to 2483.5+2BW]; per ETSI 300.328	—	-26	—	dBm
Spurious emissions per ETSI EN300.440[5]	$SPUR_{ETSI440}$	47-74 MHz,87.5-108 MHz, 174-230 MHz, 470-862 MHz	—	-60	—	dBm
		25-1000 MHz, excluding above frequencies	—	-42	—	dBm
		1G-14G	—	-36	—	dBm

Note:

1. Reference packet is defined as 20 octet PSDU, modulated according to 802.15.4-2011 DSSS-OQPSK in the 2.4GHz band, with pseudo-random packet data content.
2. For 2415 MHz, 2 dB of power backoff is used to achieve this value.
3. For 2475 MHz, 2 dB of power backoff is used to achieve this value.
4. For 2480 MHz, 13 dB of power backoff is used to achieve this value.
5. Specified at maximum power output level of 10 dBm.

4.1.9.8 RF Receiver Characteristics for 802.15.4 DSSS-OQPSK in the 2.4 GHz Band

Unless otherwise indicated, typical conditions are: T = 25 °C, VREGVDD = AVDD = IOVDD = 3.3 V, DVDD = RFVDD = PAVDD. RFVDD and PAVDD path is filtered using ferrites. Crystal frequency = 38.4 MHz. RF center frequency 2.45 GHz.

Table 4.19. RF Receiver Characteristics for 802.15.4 DSSS-OQPSK in the 2.4 GHz Band

Parameter	Symbol	Test Condition	Min	Typ	Max	Unit
Max usable receiver input level, 1% PER	SAT	Signal is reference signal[1]. Packet length is 20 octets.	—	10	—	dBm
Sensitivity, 1% PER	SENS	Signal is reference signal. Packet length is 20 octets. Using DC-DC converter.	—	-102.7	—	dBm
		Signal is reference signal. Packet length is 20 octets. Without DC-DC converter.	—	-102.7	—	dBm
Co-channel interferer rejection, 1% PER	CCR	Desired signal 3 dB above sensitivity limit	—	-4.6	—	dB
High-side adjacent channel rejection, 1% PER. Desired is reference signal at 3dB above reference sensitivity level[2]	ACR_{P1}	Interferer is reference signal at +1 channel-spacing.	—	40.7	—	dB
		Interferer is filtered reference signal[3] at +1 channel-spacing.	—	47	—	dB
		Interferer is CW at +1 channel-spacing[4].	—	54.3	—	dB
Low-side adjacent channel rejection, 1% PER. Desired is reference signal at 3dB above reference sensitivity level[2]	ACR_{M1}	Interferer is reference signal at -1 channel-spacing.	—	40.8	—	dB
		Interferer is filtered reference signal[3] at -1 channel-spacing.	—	47.5	—	dB
		Interferer is CW at -1 channel-spacing.	—	56.5	—	dB
Alternate channel rejection, 1% PER. Desired is reference signal at 3dB above reference sensitivity level[2]	ACR_2	Interferer is reference signal at ± 2 channel-spacing	—	51.5	—	dB
		Interferer is filtered reference signal[3] at ± 2 channel-spacing	—	53.7	—	dB
		Interferer is CW at ± 2 channel-spacing	—	62.4	—	dB
Image rejection , 1% PER, Desired is reference signal at 3dB above reference sensitivity level[2]	IR	Interferer is CW in image band[4]	—	50.4	—	dB
Blocking rejection of all other channels. 1% PER, Desired is reference signal at 3dB above reference sensitivity level[2]. Interferer is reference signal	BLOCK	Interferer frequency < Desired frequency - 3 channel-spacing	—	58.5	—	dB
		Interferer frequency > Desired frequency + 3 channel-spacing	—	56.4	—	dB
Blocking rejection of 802.11g signal centered at +12MHz or -13MHz[5]	$BLOCK_{80211G}$	Desired is reference signal at 6dB above reference sensitivity level[2]	—	53	—	dB

Parameter	Symbol	Test Condition	Min	Typ	Max	Unit
Upper limit of input power range over which RSSI resolution is maintained	$RSSI_{MAX}$		—	—	5	dBm
Lower limit of input power range over which RSSI resolution is maintained	$RSSI_{MIN}$		-98	—	—	dBm
RSSI resolution	$RSSI_{RES}$	over $RSSI_{MIN}$ to $RSSI_{MAX}$	—	0.25	—	dB
RSSI accuracy in the linear region as defined by 802.15.4-2003	$RSSI_{LIN}$		—	+/-6	—	dB

Note:

1. Reference signal is defined as O-QPSK DSSS per 802.15.4, Frequency range = 2400-2483.5 MHz, Symbol rate = 62.5 ksymbols/s.
2. Reference sensitivity level is -85 dBm.
3. Filter is characterized as a symmetric bandpass centered on the adjacent channel having a 3dB bandwidth of 4.6 MHz and stopband rejection better than 26 dB beyond 3.15 MHz from the adjacent carrier.
4. Due to low-IF frequency, there is some overlap of adjacent channel and image channel bands. Adjacent channel CW blocker tests place the Interferer center frequency at the Desired frequency ± 5 MHz on the channel raster, whereas the image rejection test places the CW interferer near the image frequency of the Desired signal carrier, regardless of the channel raster.
5. This is an IEEE 802.11b/g ERP-PBCC 22 MBit/s signal as defined by the IEEE 802.11 specification and IEEE 802.11g addendum.

4.1.10 Sub-GHz RF Transceiver Characteristics

4.1.10.1 Sub-GHz RF Transmitter characteristics for 915 MHz Band

Unless otherwise indicated, typical conditions are: T = 25 °C, VREGVDD = AVDD = IOVDD = 3.3 V, DVDD = RFVDD = External PA Supply. RFVDD and external PA supply paths filtered using ferrites. Crystal frequency = 38.4 MHz. RF center frequency 915 MHz.

Table 4.20. Sub-GHz RF Transmitter characteristics for 915 MHz Band

Parameter	Symbol	Test Condition	Min	Typ	Max	Unit
RF tuning frequency range	F_{RANGE}		902	—	930	MHz
Maximum TX Power[1]	$POUT_{MAX}$	External PA supply = 3.3V, 20 dBm output power setting	18	19.8	23.3	dBm
		External PA supply connected to DC-DC output, 14 dBm output power setting	12.6	14.2	16.1	dBm
Minimum active TX Power	$POUT_{MIN}$		—	-45.5	—	dBm
Output power step size	$POUT_{STEP}$	output power > 0 dBm	—	0.5	—	dB
Output power variation vs supply at $POUT_{MAX}$	$POUT_{VAR_V}$	1.8 V < $V_{VREGVDD}$ < 3.3 V, External PA supply = 3.3 V, T = 25 °C	—	4.8	—	dB
		1.8 V < $V_{VREGVDD}$ < 3.3 V, External PA supply connected to DC-DC output, T = 25 °C	—	1.9	—	dB
Output power variation vs temperature, peak to peak	$POUT_{VAR_T}$	-40 to +85 °C with External PA supply = 3.3 V	—	0.6	1.3	dB
		-40 to +85 °C with External PA supply connected to DC-DC output	—	0.7	1.4	dB
Output power variation vs RF frequency	$POUT_{VAR_F}$	External PA supply = 3.3 V, T = 25 °C	—	0.2	0.6	dB
		External PA supply connected to DC-DC output, T = 25 °C	—	0.3	0.6	dB
Spurious emissions of harmonics at 20 dBm output power, Conducted measurement, 20dBm match, External PA supply = 3.3V, Test Frequency = 915 MHz	$SPUR_{HARM_FCC_20}$	In restricted bands, per FCC Part 15.205 / 15.209	—	-45	-42	dBm
		In non-restricted bands, per FCC Part 15.247	—	-26	-20	dBc
Spurious emissions out-of-band at 20 dBm output power, Conducted measurement, 20dBm match, External PA supply = 3.3V, Test Frequency = 915 MHz	$SPUR_{OOB_FCC_20}$	In non-restricted bands, per FCC Part 15.247	—	-26	-20	dBc
		In restricted bands (30-88 MHz), per FCC Part 15.205 / 15.209	—	-62	-56	dBm
		In restricted bands (88-216 MHz), per FCC Part 15.205 / 15.209	—	-61	-56	dBm
		In restricted bands (216-960 MHz), per FCC Part 15.205 / 15.209	—	-58	-52	dBm
		In restricted bands (>960 MHz), per FCC Part 15.205 / 15.209	—	-47	-42	dBm

Parameter	Symbol	Test Condition	Min	Typ	Max	Unit
Spurious emissions of harmonics at 14 dBm output power, Conducted measurement, 14dBm match, External PA supply connected to DC-DC output, Test Frequency = 915 MHz	$SPUR_{HARM_FCC_14}$	In restricted bands, per FCC Part 15.205 / 15.209	—	-47	-42	dBm
		In non-restricted bands, per FCC Part 15.247	—	-26	-20	dBc
Spurious emissions out-of-band at 14 dBm output power, Conducted measurement, 14dBm match, External PA supply connected to DC-DC output, Test Frequency = 915 MHz	$SPUR_{OOB_FCC_14}$	In non-restricted bands, per FCC Part 15.247	—	-26	-20	dBc
		In restricted bands (30-88 MHz), per FCC Part 15.205 / 15.209	—	-62	-56	dBm
		In restricted bands (88-216 MHz), per FCC Part 15.205 / 15.209	—	-61	-56	dBm
		In restricted bands (216-960 MHz), per FCC Part 15.205 / 15.209	—	-58	-52	dBm
		In restricted bands (>960 MHz), per FCC Part 15.205 / 15.209	—	-45	-42	dBm
Error vector magnitude (offset EVM), per 802.15.4-2011	EVM	Signal is DSSS-OQPSK reference packet. Modulated according to 802.15.4-2011 DSSS-OQPSK in the 915MHz band, with pseudo-random packet data content. External PA supply = 3.3V.	—	1.0	2.8	%rms
Power spectral density limit[2]	PSD	Relative, at carrier ± 1.2 MHz. Average spectral power shall be measured using a 100kHz resolution bandwidth. The reference level shall be the highest average spectral power measured within ± 600kHz of the carrier frequency. External PA supply = 3.3V.	—	-37.1	-24.8	dBc/ 100kHz
		Absolute, at carrier ± 1.2 MHz. Average spectral power shall be measured using a 100kHz resolution bandwidth. External PA supply = 3.3V.	—	-24.2	-20	dBm/ 100kHz

Note:

1. Supported transmit power levels are determined by the ordering part number (OPN). Transmit power ratings for all devices covered in this datasheet can be found in the Max TX Power column of the Ordering Information Table.
2. Definition of reference signal is O-QPSK DSSS per 802.15.4, Frequency Range = 902-928 MHz, Data rate = 250 kbps, 16-chip PN sequence mapping.

4.1.10.2 Sub-GHz RF Receiver Characteristics for 915 MHz Band

Unless otherwise indicated, typical conditions are: T = 25 °C, VREGVDD = AVDD = IOVDD = 3.3 V, DVDD = RFVDD = External PA Supply. RFVDD and external PA supply paths filtered using ferrites. Crystal frequency = 38.4 MHz. RF center frequency 915 MHz.

Table 4.21. Sub-GHz RF Receiver Characteristics for 915 MHz Band

Parameter	Symbol	Test Condition	Min	Typ	Max	Unit
Tuning frequency range	F_{RANGE}		902	—	930	MHz
Max usable input level, 0.1% BER	SAT_{500K}	Desired is reference 500 kbps GFSK signal[1]	—	10	—	dBm
Sensitivity	SENS	Desired is reference 4.8 kbps OOK signal[2], 20% PER, T ≤ 85 °C	—	-105.2	-100.7	dBm
		Desired is reference 600 bps GFSK signal[3], 0.1% BER	—	-126.2	—	dBm
		Desired is reference 50 kbps GFSK signal[4], 0.1% BER, T ≤ 85 °C	—	-108.2	-104.2	dBm
		Desired is reference 100 kbps GFSK signal[5], 0.1% BER, T ≤ 85 °C	—	-105.1	-101.5	dBm
		Desired is reference 500 kbps GFSK signal[1], 0.1% BER, T ≤ 85 °C	—	-98.2	-93.2	dBm
		Desired is reference 400 kbps 4GFSK signal[6], 1% PER, T ≤ 85 °C	—	-95.2	-91	dBm
		Desired is reference O-QPSK DSSS signal[7], 1% PER, Payload length is 20 octets	—	-100.1	—	dBm
Level above which RFSENSE will trigger[8]	$RFSENSE_{TRIG}$	CW at 915 MHz	—	-28.1	—	dBm
Level below which RFSENSE will not trigger[8]	$RFSENSE_{THRES}$	CW at 915 MHz	—	-50	—	dBm

Parameter	Symbol	Test Condition	Min	Typ	Max	Unit
Adjacent channel selectivity, Interferer is CW at ± 1 × channel-spacing	C/I_1	Desired is 4.8 kbps OOK signal[2] at 3dB above sensitivity level, 20% PER	—	48.1	—	dB
		Desired is 600 bps GFSK signal[3] at 3dB above sensitivity level, 0.1% BER	—	71.4	—	dB
		Desired is 50 kbps GFSK signal[4] at 3dB above sensitivity level, 0.1% BER	—	49.8	—	dB
		Desired is 100 kbps GFSK signal[5] at 3dB above sensitivity level, 0.1% BER	—	51.1	—	dB
		Desired is 500 kbps GFSK signal[1] at 3dB above sensitivity level, 0.1% BER	—	48.1	—	dB
		Desired is 400 kbps 4GFSK signal[6] at 3dB above sensitivity level, 0.1% BER	—	41.4	—	dB
		Desired is reference O-QPSK DSSS signal[7] at 3dB above sensitivity level, 1% PER	—	49.1	—	dB
Alternate channel selectivity, Interferer is CW at ± 2 × channel-spacing	C/I_2	Desired is 4.8 kbps OOK signal[2] at 3dB above sensitivity level, 20% PER	—	56.3	—	dB
		Desired is 600 bps GFSK signal[3] at 3dB above sensitivity level, 0.1% BER	—	74.7	—	dB
		Desired is 50 kbps GFSK signal[4] at 3dB above sensitivity level, 0.1% BER	—	55.8	—	dB
		Desired is 100 kbps GFSK signal[5] at 3dB above sensitivity level, 0.1% BER	—	56.4	—	dB
		Desired is 500 kbps GFSK signal[1] at 3dB above sensitivity level, 0.1% BER	—	51.8	—	dB
		Desired is 400 kbps 4GFSK signal[6] at 3dB above sensitivity level, 0.1% BER	—	46.8	—	dB
		Desired is reference O-QPSK DSSS signal[7] at 3dB above sensitivity level, 1% PER	—	57.7	—	dB

Parameter	Symbol	Test Condition	Min	Typ	Max	Unit
Image rejection, Interferer is CW at image frequency	C/I_{IMAGE}	Desired is 4.8 kbps OOK signal[2] at 3dB above sensitivity level, 20% PER	—	48.4	—	dB
		Desired is 50 kbps GFSK signal[4] at 3dB above sensitivity level, 0.1% BER	—	54.9	—	dB
		Desired is 100 kbps GFSK signal[5] at 3dB above sensitivity level, 0.1% BER	—	49.1	—	dB
		Desired is 500 kbps GFSK signal[1] at 3dB above sensitivity level, 0.1% BER	—	47.9	—	dB
		Desired is 400 kbps 4GFSK signal[6] at 3dB above sensitivity level, 0.1% BER	—	42.8	—	dB
		Desired is reference O-QPSK DSSS signal[7] at 3dB above sensitivity level, 1% PER	—	48.9	—	dB
Blocking selectivity, 0.1% BER. Desired is 100 kbps GFSK signal at 3dB above sensitivity level	$C/I_{BLOCKER}$	Interferer CW at Desired ± 1 MHz	—	58.7	—	dB
		Interferer CW at Desired ± 2 MHz	—	62.5	—	dB
		Interferer CW at Desired ± 10 MHz	—	76.4	—	dB
Intermod selectivity, 0.1% BER. CW interferers at 400 kHz and 800 kHz offsets	C/I_{IM}	Desired is 100 kbps GFSK signal[5] at 3dB above sensitivity level	—	45	—	dB
Upper limit of input power range over which RSSI resolution is maintained	$RSSI_{MAX}$		—	—	5	dBm
Lower limit of input power range over which RSSI resolution is maintained	$RSSI_{MIN}$		-98	—	—	dBm
RSSI resolution	$RSSI_{RES}$	Over $RSSI_{MIN}$ to $RSSI_{MAX}$ range	—	0.25	—	dBm
Max spurious emissions during active receive mode, per FCC Part 15.109(a)	$SPUR_{RX_FCC}$	216-960 MHz	—	-55	-49.2	dBm
		Above 960 MHz	—	-47	-41.2	dBm
Max spurious emissions during active receive mode,per ARIB STD-T108 Section 3.3	$SPUR_{RX_ARIB}$	Below 710 MHz, RBW=100kHz	—	-60	-54	dBm
		710-900 MHz, RBW=1MHz	—	-61	-55	dBm
		900-915 MHz, RBW=100kHz	—	-61	-55	dBm
		915-930 MHz, RBW=100kHz	—	-61	-55	dBm
		930-1000 MHz, RBW=100kHz	—	-61	-55	dBm
		Above 1000 MHz, RBW=1MHz	—	-53	-47	dBm

Parameter	Symbol	Test Condition	Min	Typ	Max	Unit

Note:

1. Definition of reference signal is 500 kbps 2GFSK, BT=0.5, Δf = 175 kHz, RX channel BW = 835.076 kHz, channel spacing = 1 MHz.
2. Definition of reference signal is 4.8 kbps OOK, RX channel BW = 306.036 kHz, channel spacing = 500 kHz.
3. Definition of reference signal is 600 bps 2GFSK, BT=0.5, Δf = 0.3 kHz, RX channel BW = 1.2 kHz, channel spacing = 300 kHz.
4. Definition of reference signal is 50 kbps 2GFSK, BT=0.5, Δf = 25 kHz, RX channel BW = 99.012 kHz, channel spacing = 200 kHz.
5. Definition of reference signal is 100 kbps 2GFSK, BT=0.5, Δf = 50 kHz, RX channel BW = 198.024 kHz, channel spacing = 400 kHz.
6. Definition of reference signal is 400 kbps 4GFSK, BT=0.5, inner deviation = 33.3 kHz, RX channel BW = 368.920 kHz, channel spacing = 600 kHz.
7. Definition of reference signal is O-QPSK DSSS per 802.15.4, Frequency Range = 902-928 MHz, Data rate = 250 kbps, 16-chip PN sequence mapping.
8. RFSENSE performance is only valid from 0 to 85 °C. RFSENSE should be disabled outside this temperature range.

4.1.10.3 Sub-GHz RF Transmitter characteristics for 868 MHz Band

Unless otherwise indicated, typical conditions are: T = 25 °C, VREGVDD = AVDD = IOVDD = 3.3 V, DVDD = RFVDD = External PA Supply. RFVDD and external PA supply paths filtered using ferrites. Crystal frequency = 38.4 MHz. RF center frequency 868 MHz.

Table 4.22. Sub-GHz RF Transmitter characteristics for 868 MHz Band

Parameter	Symbol	Test Condition	Min	Typ	Max	Unit
RF tuning frequency range	F_{RANGE}		863	—	876	MHz
Maximum TX Power[1]	$POUT_{MAX}$	External PA supply = 3.3V, 20 dBm output power setting, T ≤ 85 °C	17.1	19.3	22.9	dBm
		External PA supply connected to DC-DC output, 14 dBm output power setting	11.4	13.7	16.5	dBm
Minimum active TX Power	$POUT_{MIN}$		—	-43.5	—	dBm
Output power step size	$POUT_{STEP}$	output power > 0 dBm	—	0.5	—	dB
Output power variation vs supply at $POUT_{MAX}$	$POUT_{VAR_V}$	1.8 V < $V_{VREGVDD}$ < 3.3 V, External PA supply = 3.3 V, T = 25 °C	—	5	—	dB
		1.8 V < $V_{VREGVDD}$ < 3.3 V, External PA supply connected to DC-DC output, T = 25 °C	—	2	—	dB
Output power variation vs temperature, peak to peak	$POUT_{VAR_T}$	-40 to +85 °C with External PA supply = 3.3 V	—	0.6	0.9	dB
		-40 to +85 °C with External PA supply connected to DC-DC output	—	0.5	1.2	dB
Output power variation vs RF frequency	$POUT_{VAR_F}$	External PA supply = 3.3 V, T = 25 °C	—	0.2	0.6	dB
		External PA supply connected to DC-DC output, T = 25 °C	—	0.2	0.8	dB
Spurious emissions of harmonics, Conducted measurement, Test Frequency = 868 MHz	$SPUR_{HARM_ETSI}$	Per ETSI EN 300-220, Section 7.8.2.1, External PA supply connected to: DCDC at 14 dBm, or 3.3 V at 19.5 dBm	—	-35	-30	dBm
Spurious emissions out-of-band, Conducted measurement, Test Frequency = 868 MHz	$SPUR_{OOB_ETSI}$	Per ETSI EN 300-220, Section 7.8.2.1 (47-74 MHz, 87.5-118 MHz, 174-230 MHz, and 470-862 MHz), External PA supply connected to: DCDC at 14 dBm, or 3.3 V at 19.5 dBm	—	-59	-54	dBm
		Per ETSI EN 300-220, Section 7.8.2.1 (other frequencies below 1 GHz), External PA supply connected to: DCDC at 14 dBm, or 3.3 V at 19.5 dBm	—	-42	-36	dBm
		Per ETSI EN 300-220, Section 7.8.2.1 (frequencies above 1 GHz), External PA supply connected to: DCDC at 14 dBm, or 3.3 V at 19.5 dBm	—	-36	-30	dBm

Parameter	Symbol	Test Condition	Min	Typ	Max	Unit
Error vector magnitude (offset EVM), per 802.15.4-2015	EVM	Signal is DSSS-BPSK reference packet. Modulated according to 802.15.4-2015 DSSS-BPSK in the 868MHz band, with pseudo-random packet data content. External PA supply connected to external 3.3V supply	—	5.7	—	%rms

Note:

1. Supported transmit power levels are determined by the ordering part number (OPN). Transmit power ratings for all devices covered in this datasheet can be found in the Max TX Power column of the Ordering Information Table.

4.1.10.4 Sub-GHz RF Receiver Characteristics for 868 MHz Band

Unless otherwise indicated, typical conditions are: T = 25 °C, VREGVDD = AVDD = IOVDD = 3.3 V, DVDD = RFVDD = External PA Supply. RFVDD and external PA supply paths filtered using ferrites. Crystal frequency = 38.4 MHz. RF center frequency 868 MHz.

Table 4.23. Sub-GHz RF Receiver Characteristics for 868 MHz Band

Parameter	Symbol	Test Condition	Min	Typ	Max	Unit
Tuning frequency range	F_{RANGE}		863	—	876	MHz
Max usable input level, 0.1% BER	SAT_{2k4}	Desired is reference 2.4 kbps GFSK signal[1]	—	10	—	dBm
Max usable input level, 0.1% BER	SAT_{38k4}	Desired is reference 38.4 kbps GFSK signal[2]	—	10	—	dBm
Sensitivity	SENS	Desired is reference 2.4 kbps GFSK signal[1], 0.1% BER	—	-120.6	—	dBm
		Desired is reference 38.4 kbps GFSK signal[2], 0.1% BER, T ≤ 85 °C	—	-109.5	-105.4	dBm
		Desired is reference 500 kbps GFSK signal[3], 0.1% BER	—	-96.4	—	dBm
		Desired is reference BPSK signal[4], 1% PER	—	-110.6	—	dBm
Level above which RFSENSE will trigger[5]	$RFSENSE_{TRIG}$	CW at 868 MHz	—	-28.1	—	dBm
Level below which RFSENSE will not trigger[5]	$RFSENSE_{THRES}$	CW at 868 MHz	—	-50	—	dBm
Adjacent channel selectivity, Interferer is CW at ± 1 × channel-spacing	C/I_1	Desired is 2.4 kbps GFSK signal[1] at 3dB above sensitivity level, 0.1% BER	44.5	56.9	—	dB
		Desired is 38.4kbps GFSK signal[2] at 3dB above sensitivity level, 0.1% BER	35.4	43	—	dB
Alternate channel selectivity, Interferer is CW at ± 2 × channel-spacing	C/I_2	Desired is 2.4kbps GFSK signal[1] at 3dB above sensitivity level, 0.1% BER	—	56.8	—	dB
		Desired is 38.4kbps GFSK signal[2] at 3dB above sensitivity level, 0.1% BER	—	48.2	—	dB
Image rejection, Interferer is CW at image frequency	C/I_{IMAGE}	Desired is 2.4kbps GFSK signal[1] at 3dB above sensitivity level, 0.1% BER	—	50.2	—	dB
		Desired is 38.4kbps GFSK signal[2] at 3dB above sensitivity level, 0.1% BER	—	48.7	—	dB
Blocking selectivity, 0.1% BER. Desired is 2.4 kbps GFSK signal[1] at 3 dB above sensitivity level	$C/I_{BLOCKER}$	Interferer CW at Desired ± 1 MHz	—	72.1	—	dB
		Interferer CW at Desired ± 2 MHz	—	77.5	—	dB
		Interferer CW at Desired ± 10 MHz	—	90.4	—	dB

Parameter	Symbol	Test Condition	Min	Typ	Max	Unit
Upper limit of input power range over which RSSI resolution is maintained	$RSSI_{MAX}$		—	—	5	dBm
Lower limit of input power range over which RSSI resolution is maintained	$RSSI_{MIN}$		-98	—	—	dBm
RSSI resolution	$RSSI_{RES}$	Over $RSSI_{MIN}$ to $RSSI_{MAX}$ range	—	0.25	—	dBm
Max spurious emissions during active receive mode	$SPUR_{RX}$	30 MHz to 1 GHz	—	-63	-57	dBm
		1 GHz to 12 GHz	—	-53	-47	dBm

Note:

1. Definition of reference signal is 2.4 kbps 2GFSK, BT=0.5, Δf = 1.2 kHz, RX channel BW = 4.797 kHz, channel spacing = 12.5 kHz.
2. Definition of reference signal is 38.4 kbps 2GFSK, BT=0.5, Δf = 20 kHz, RX channel BW = 74.809 kHz, channel spacing = 100 kHz.
3. Definition of reference signal is 500 kbps 2GFSK, BT=0.5, Δf = 125 kHz, RX channel BW = 753.320 kHz.
4. Definition of reference signal is 20 kbps BPSK
5. RFSENSE performance is only valid from 0 to 85 °C. RFSENSE should be disabled outside this temperature range.

4.1.10.5 Sub-GHz RF Transmitter characteristics for 490 MHz Band

Unless otherwise indicated, typical conditions are: T = 25 °C, VREGVDD = AVDD = IOVDD = 3.3 V, DVDD = RFVDD = External PA Supply. RFVDD and external PA supply paths filtered using ferrites. Crystal frequency = 38.4 MHz. RF center frequency 490 MHz.

Table 4.24. Sub-GHz RF Transmitter characteristics for 490 MHz Band

Parameter	Symbol	Test Condition	Min	Typ	Max	Unit
RF tuning frequency range	F_{RANGE}		470	—	510	MHz
Maximum TX Power[1]	$POUT_{MAX}$	External PA supply = 3.3V	18.1	20.3	23.7	dBm
Minimum active TX Power	$POUT_{MIN}$			-44.9	—	dBm
Output power step size	$POUT_{STEP}$	output power > 0 dBm	—	0.5	—	dB
Output power variation vs supply, peak to peak	$POUT_{VAR_V}$	at 20 dBm;1.8 V < $V_{VREGVDD}$ < 3.3 V, External PA supply connected directly to external supply, T = 25 °C	—	4.3	—	dB
Output power variation vs temperature, peak to peak	$POUT_{VAR_T}$	-40 to +85 °C at 20 dBm	—	0.2	0.9	dB
Output power variation vs RF frequency	$POUT_{VAR_F}$	T = 25 °C	—	0.2	0.4	dB
Harmonic emissions, 20 dBm output power setting, 490 MHz	$SPUR_{HARM_CN}$	Per China SRW Requirement, Section 2.1, frequencies below 1GHz	—	-40	-36	dBm
		Per China SRW Requirement, Section 2.1, frequencies above 1GHz	—	-36	-30	dBm
Spurious emissions, 20 dBm output power setting, 490 MHz	$SPUR_{OOB_CN}$	Per China SRW Requirement, Section 3 (48.5-72.5MHz, 76-108MHz, 167-223MHz, 470-556MHz, and 606-798MHz)	—	-54	—	dBm
		Per China SRW Requirement, Section 2.1 (other frequencies below 1GHz)	—	-42	—	dBm
		Per China SRW Requirement, Section 2.1 (frequencies above 1GHz)	—	-36	—	dBm

Note:

1. Supported transmit power levels are determined by the ordering part number (OPN). Transmit power ratings for all devices covered in this datasheet can be found in the Max TX Power column of the Ordering Information Table.

4.1.10.6 Sub-GHz RF Receiver Characteristics for 490 MHz Band

Unless otherwise indicated, typical conditions are: T = 25 °C, VREGVDD = AVDD = IOVDD = 3.3 V, DVDD = RFVDD = External PA Supply. RFVDD and external PA supply paths filtered using ferrites. Crystal frequency = 38.4 MHz. RF center frequency 490 MHz.

Table 4.25. Sub-GHz RF Receiver Characteristics for 490 MHz Band

Parameter	Symbol	Test Condition	Min	Typ	Max	Unit
Tuning frequency range	F_{RANGE}		470	—	510	MHz
Max usable input level, 0.1% BER	SAT_{2k4}	Desired is reference 2.4 kbps GFSK signal[1]	—	10	—	dBm
Max usable input level, 0.1% BER	SAT_{38k4}	Desired is reference 38.4 kbps GFSK signal[2]	—	10	—	dBm
Sensitivity	SENS	Desired is reference 2.4 kbps GFSK signal[1], 0.1% BER	—	-122.2	—	dBm
		Desired is reference 38.4 kbps GFSK signal[2], 0.1% BER, T ≤ 85 °C	—	-111.4	-108.9	dBm
		Desired is reference 10 kbps GFSK signal[3], 0.1% BER, T ≤ 85 °C	—	-116.8	-113.9	dBm
		Desired is reference 100 kbps GFSK signal[4], 0.1% BER, T ≤ 85 °C	—	-107.3	-104.7	dBm
Level above which RFSENSE will trigger[5]	$RFSENSE_{TRIG}$	Desired is reference 100 kbps GFSK signal[4], 0.1% BER	—	-28.1	—	dBm
Level below which RFSENSE will not trigger[5]	$RFSENSE_{THRES}$	CW at 490 MHz	—	-50	—	dBm
Adjacent channel selectivity, Interferer is CW at ± 1 × channel-spacing	C/I_1	Desired is 2.4 kbps GFSK signal[1] at 3dB above sensitivity level, 0.1% BER	48	60.3	—	dB
		Desired is 38.4kbps GFSK signal[2] at 3dB above sensitivity level, 0.1% BER	38.3	45.6	—	dB
Alternate channel selectivity, Interferer is CW at ± 2 × channel-spacing	C/I_2	Desired is 2.4kbps GFSK signal[1] at 3dB above sensitivity level, 0.1% BER	—	60.4	—	dB
		Desired is 38.4kbps GFSK signal[2] at 3dB above sensitivity level, 0.1% BER	—	52.6	—	dB
Image rejection, Interferer is CW at image frequency	C/I_{IMAGE}	Desired is 2.4kbps GFSK signal[1] at 3dB above sensitivity level, 0.1% BER	—	56.5	—	dB
		Desired is 38.4kbps GFSK signal[2] at 3dB above sensitivity level, 0.1% BER	—	54.1	—	dB
Blocking selectivity, 0.1% BER. Desired is 2.4 kbps GFSK signal[1] at 3 dB above sensitivity level	$C/I_{BLOCKER}$	Interferer CW at Desired ± 1 MHz	—	73.9	—	dB
		Interferer CW at Desired ± 2 MHz	—	75.4	—	dB
		Interferer CW at Desired ± 10 MHz	—	90.2	—	dB

Parameter	Symbol	Test Condition	Min	Typ	Max	Unit
Upper limit of input power range over which RSSI resolution is maintained	$RSSI_{MAX}$		—	—	5	dBm
Lower limit of input power range over which RSSI resolution is maintained	$RSSI_{MIN}$		-98	—	—	dBm
RSSI resolution	$RSSI_{RES}$	Over $RSSI_{MIN}$ to $RSSI_{MAX}$ range	—	0.25	—	dBm
Max spurious emissions during active receive mode	$SPUR_{RX}$	30 MHz to 1 GHz	—	-53	-47	dBm
		1 GHz to 12 GHz	—	-53	-47	dBm

Note:

1. Definition of reference signal is 2.4 kbps 2GFSK, BT=0.5, Δf = 1.2 kHz, RX channel BW = 4.798 kHz, channel spacing = 12.5 kHz.
2. Definition of reference signal is 38.4 kbps 2GFSK, BT=0.5, Δf = 20 kHz, RX channel BW = 74.809 kHz, channel spacing = 100 kHz.
3. Definition of reference signal is 10 kbps 2GFSK, BT=0.5, Δf = 5 kHz, RX channel BW = 20.038 kHz.
4. Definition of reference signal is 100 kbps 2GFSK, BT=0.5, Δf = 50 kHz, RX channel BW = 198.024 kHz.
5. RFSENSE performance is only valid from 0 to 85 °C. RFSENSE should be disabled outside this temperature range.

4.1.10.7 Sub-GHz RF Transmitter characteristics for 433 MHz Band

Unless otherwise indicated, typical conditions are: T = 25 °C, VREGVDD = AVDD = IOVDD = 3.3 V, DVDD = RFVDD = External PA Supply. RFVDD and external PA supply paths filtered using ferrites. Crystal frequency = 38.4 MHz. RF center frequency 433 MHz.

Table 4.26. Sub-GHz RF Transmitter characteristics for 433 MHz Band

Parameter	Symbol	Test Condition	Min	Typ	Max	Unit
RF tuning frequency range	F_{RANGE}		426	—	445	MHz
Maximum TX Power[1]	$POUT_{MAX}$	External PA supply connected to DC-DC output, 14dBm output power	12.5	15.1	17.4	dBm
		External PA supply connected to DC-DC output, 10dBm output power	8.3	10.6	13.3	dBm
Minimum active TX Power	$POUT_{MIN}$		—	-42	—	dBm
Output power step size	$POUT_{STEP}$	output power > 0 dBm	—	0.5	—	dB
Output power variation vs supply, peak to peak, Pout = 10dBm	$POUT_{VAR_V}$	At 10 dBm;1.8 V < $V_{VREGVDD}$ < 3.3 V, External PA supply = DC-DC output, T = 25 °C	—	1.7	—	dB
Output power variation vs temperature, peak to peak, Pout= 10dBm	$POUT_{VAR_T}$	-40 to +85C at 10dBm	—	0.5	1.2	dB
Output power variation vs RF frequency, Pout = 10dBm	$POUT_{VAR_F}$	T = 25 °C	—	0.1	0.2	dB
Spurious emissions of harmonics FCC, Conducted measurement, 14dBm match, External PA supply connected to DC-DC output, Test Frequency = 434 MHz	$SPUR_{HARM_FCC}$	In restricted bands, per FCC Part 15.205 / 15.209	—	-47	-42	dBm
		In non-restricted bands, per FCC Part 15.231	—	-26	-20	dBc
Spurious emissions out-of-band FCC, Conducted measurement, 14dBm match, External PA supply connected to DC-DC output, Test Frequency = 434 MHz	$SPUR_{OOB_FCC}$	In non-restricted bands, per FCC Part 15.231	—	-26	-20	dBc
		In restricted bands (30-88 MHz), per FCC Part 15.205 / 15.209	—	-52	-46	dBm
		In restricted bands (88-216 MHz), per FCC Part 15.205 / 15.209	—	-61	-56	dBm
		In restricted bands (216-960 MHz), per FCC Part 15.205 / 15.209	—	-58	-52	dBm
		In restricted bands (>960 MHz), per FCC Part 15.205 / 15.209	—	-47	-42	dBm
Spurious emissions of harmonics ETSI, Conducted measurement, 14dBm match, External PA supply connected to DC-DC output, Test Frequency = 434 MHz	$SPUR_{HARM_ETSI}$	Per ETSI EN 300-220, Section 7.8.2.1 (frequencies below 1Ghz)	—	-42	-36	dBm
		Per ETSI EN 300-220, Section 7.8.2.1 (frequencies above 1Ghz)	—	-36	-30	dBm

Parameter	Symbol	Test Condition	Min	Typ	Max	Unit
Spurious emissions out-of-band ETSI, Conducted measurement, 14dBm match, External PA supply connected to DC-DC output, Test Frequency = 434 MHz	$SPUR_{OOB_ETSI}$	Per ETSI EN 300-220, Section 7.8.2.1 (47-74 MHz, 87.5-118 MHz, 174-230 MHz, and 470-862 MHz)	—	-60	-54	dBm
		Per ETSI EN 300-220, Section 7.8.2.1 (other frequencies below 1 GHz)	—	-42	-36	dBm
		Per ETSI EN 300-220, Section 7.8.2.1 (frequencies above 1 GHz)	—	-36	-30	dBm

Note:

1. Supported transmit power levels are determined by the ordering part number (OPN). Transmit power ratings for all devices covered in this datasheet can be found in the Max TX Power column of the Ordering Information Table.

4.1.10.8 Sub-GHz RF Receiver Characteristics for 433 MHz Band

Unless otherwise indicated, typical conditions are: T = 25 °C, VREGVDD = AVDD = IOVDD = 3.3 V, DVDD = RFVDD = External PA Supply. RFVDD and external PA supply paths filtered using ferrites. Crystal frequency = 38.4 MHz. RF center frequency 433 MHz.

Table 4.27. Sub-GHz RF Receiver Characteristics for 433 MHz Band

Parameter	Symbol	Test Condition	Min	Typ	Max	Unit
Tuning frequency range	F_{RANGE}		426	—	445	MHz
Max usable input level, 0.1% BER	SAT_{2k4}	Desired is reference 2.4 kbps GFSK signal[1]	—	10	—	dBm
Max usable input level, 0.1% BER	SAT_{50k}	Desired is reference 50 kbps GFSK signal[2]	—	10	—	dBm
Sensitivity	SENS	Desired is reference 4.8 kbps OOK signal[3], 20% PER	—	-107.4	—	dBm
		Desired is reference 100 kbps GFSK signal[4], 0.1% BER, T ≤ 85 °C	—	-107.3	-105	dBm
		Desired is reference 50 kbps GFSK signal[2], 0.1% BER, T ≤ 85 °C	—	-110.3	-107.2	dBm
		Desired is reference 2.4 kbps GFSK signal[1], 0.1% BER	—	-123.1	—	dBm
		Desired is reference 9.6 kbps GFSK signal[5], 1% PER, T ≤ 85 °C	—	-112.6	-109	dBm
Level above which RFSENSE will trigger[6]	$RFSENSE_{TRIG}$	CW at 433 MHz	—	-28.1	—	dBm
Level below which RFSENSE will not trigger[6]	$RFSENSE_{THRES}$	CW at 433 MHz	—	-50	—	dBm
Adjacent channel selectivity, Interferer is CW at ± 1 × channel-spacing	C/I_1	Desired is 4.8 kbps OOK signal[3] at 3dB above sensitivity level, 20% PER	—	51.6	—	dB
		Desired is 100 kbps GFSK signal[4] at 3dB above sensitivity level, 0.1% BER	35	44.1	—	dB
		Desired is 2.4 kbps GFSK signal[1] at 3dB above sensitivity level, 0.1% BER	47	61.5	—	dB
		Desired is 50 kbps GFSK signal[2] at 3dB above sensitivity level, 0.1% BER	45.6	53.1	—	dB
		Desired is 9.6 kbps 4GFSK signal[5] at 3dB above sensitivity level, 1% PER	—	35.7	—	dB

Parameter	Symbol	Test Condition	Min	Typ	Max	Unit
Alternate channel selectivity, Interferer is CW at ± 2 × channel-spacing	C/I_2	Desired is 4.8 kbps OOK signal[3] at 3dB above sensitivity level, 20% PER	—	57.8	—	dB
		Desired is 100 kbps GFSK signal[4] at 3dB above sensitivity level, 0.1% BER	—	54.6	—	dB
		Desired is 2.4 kbps GFSK signal[1] at 3dB above sensitivity level, 0.1% BER	—	62.4	—	dB
		Desired is 50 kbps GFSK signal[2] at 3dB above sensitivity level, 0.1% BER	—	58.1	—	dB
		Desired is 9.6 kbps 4GFSK signal[5] at 3dB above sensitivity level, 1% PER	—	50.6	—	dB
Image rejection, Interferer is CW at image frequency	C/I_{IMAGE}	Desired is 4.8 kbps OOK signal[3] at 3dB above sensitivity level, 20% PER	—	46.5	—	dB
		Desired is 100 kbps GFSK signal[4] at 3dB above sensitivity level, 0.1% BER	—	51.7	—	dB
		Desired is 2.4 kbps GFSK signal[1] at 3dB above sensitivity level, 0.1% BER	—	57.5	—	dB
		Desired is 50 kbps GFSK signal[2] at 3dB above sensitivity level, 0.1% BER	—	54.4	—	dB
		Desired is 9.6 kbps 4GFSK signal[5] at 3dB above sensitivity level, 1% PER	—	48	—	dB
Blocking selectivity, 0.1% BER. Desired is 2.4 kbps GFSK signal[1] at 3dB above sensitivity level	$C/I_{BLOCKER}$	Interferer CW at Desired ± 1 MHz	—	75.7	—	dB
		Interferer CW at Desired ± 2 MHz	—	77.2	—	dB
		Interferer CW at Desired ± 10 MHz	—	92	—	dB
Intermod selectivity, 0.1% BER. CW interferers at 12.5 kHz and 25 kHz offsets	C/I_{IM}	Desired is 2.4 kbps GFSK signal[1] at 3dB above sensitivity level	—	58.8	—	dB
Upper limit of input power range over which RSSI resolution is maintained	$RSSI_{MAX}$		—	—	5	dBm
Lower limit of input power range over which RSSI resolution is maintained	$RSSI_{MIN}$		-98	—	—	dBm
RSSI resolution	$RSSI_{RES}$	Over $RSSI_{MIN}$ to $RSSI_{MAX}$ range	—	0.25	—	dBm
Max spurious emissions during active receive mode, per FCC Part 15.109(a)	$SPUR_{RX_FCC}$	216-960 MHz	—	-55	-49	dBm
		Above 960 MHz	—	-47	-41	dBm

Parameter	Symbol	Test Condition	Min	Typ	Max	Unit
Max spurious emissions during active receive mode, per ETSI 300-220 Section 8.6	$SPUR_{RX_ETSI}$	Below 1000 MHz	—	-63	-57	dBm
		Above 1000 MHz	—	-53	-47	dBm
Max spurious emissions during active receive mode, per ARIB STD T67 Section 3.3(5)	$SPUR_{RX_ARIB}$	Below 710 MHz, RBW=100kHz	—	-60	-54	dBm

Note:

1. Definition of reference signal is 2.4 kbps 2GFSK, BT=0.5, Δf = 1.2 kHz, RX channel BW = 4.798 kHz, channel spacing = 12.5 kHz.
2. Definition of reference signal is 50 kbps 2GFSK, BT=0.5, Δf = 25 kHz, RX channel BW = 99.012 kHz, channel spacing = 200 kHz.
3. Definition of reference signal is 4.8 kbps OOK, RX channel BW = 306.036 kHz, channel spacing = 500 kHz.
4. Definition of reference signal is 100 kbps 2GFSK, BT=0.5, Δf = 50 kHz, RX channel BW = 198.024 kHz, channel spacing = 200 kHz.
5. Definition of reference signal is 9.6 kbps 4GFSK, BT=0.5, inner deviation = 0.8 kHz, RX channel BW = 8.5 kHz, channel spacing = 12.5 kHz.
6. RFSENSE performance is only valid from 0 to 85 °C. RFSENSE should be disabled outside this temperature range.

4.1.10.9 Sub-GHz RF Transmitter characteristics for 315 MHz Band

Unless otherwise indicated, typical conditions are: T = 25 °C, VREGVDD = AVDD = IOVDD = 3.3 V, DVDD = RFVDD = External PA Supply. RFVDD and external PA supply paths filtered using ferrites. Crystal frequency = 38.4 MHz. RF center frequency 315 MHz.

Table 4.28. Sub-GHz RF Transmitter characteristics for 315 MHz Band

Parameter	Symbol	Test Condition	Min	Typ	Max	Unit
RF tuning frequency range	F_{RANGE}		195	—	358	MHz
Maximum TX Power[1]	$POUT_{MAX}$	External PA supply connected to DC-DC output, T ≤ 85 °C	13.8	17.2	21.1	dBm
Minimum active TX Power	$POUT_{MIN}$			-43.9	—	dBm
Output power step size	$POUT_{STEP}$	output power > 0 dBm	—	0.5	—	dB
Output power variation vs supply	$POUT_{VAR_V}$	1.8 V < $V_{VREGVDD}$ < 3.3 V, External PA supply = DC-DC output, T = 25 °C	—	1.8	—	dB
Output power variation vs temperature	$POUT_{VAR_T}$	-40 to +85C	—	0.5	1.2	dB
Output power variation vs RF frequency	$POUT_{VAR_F}$	T = 25 °C	—	0.1	0.7	dB
Spurious emissions of harmonics at 14 dBm output power, Conducted measurement, 14dBm match, External PA supply connected to DC-DC output, Test Frequency = 303 MHz	$SPUR_{HARM_FCC}$	In restricted bands, per FCC Part 15.205 / 15.209	—	-47	-42	dBm
		In non-restricted bands, per FCC Part 15.231	—	-26	-20	dBc
Spurious emissions out-of-band at 14 dBm output power, Conducted measurement, 14dBm match, External PA supply connected to DC-DC output, Test Frequency = 303 MHz	$SPUR_{OOB_FCC}$	In non-restricted bands, per FCC Part 15.231	—	-26	-20	dBc
		In restricted bands (30-88 MHz), per FCC Part 15.205 / 15.209	—	-52	-46	dBm
		In restricted bands (88-216 MHz), per FCC Part 15.205 / 15.209	—	-61	-56	dBm
		In restricted bands (216-960 MHz), per FCC Part 15.205 / 15.209	—	-58	-52	dBm
		In restricted bands (>960 MHz), per FCC Part 15.205 / 15.209	—	-47	-42	dBm

Note:

1. Supported transmit power levels are determined by the ordering part number (OPN). Transmit power ratings for all devices covered in this datasheet can be found in the Max TX Power column of the Ordering Information Table.

4.1.10.10 Sub-GHz RF Receiver Characteristics for 315 MHz Band

Unless otherwise indicated, typical conditions are: T = 25 °C, VREGVDD = AVDD = IOVDD = 3.3 V, DVDD = RFVDD = External PA Supply. RFVDD and external PA supply paths filtered using ferrites. Crystal frequency = 38.4 MHz. RF center frequency 315 MHz.

Table 4.29. Sub-GHz RF Receiver Characteristics for 315 MHz Band

Parameter	Symbol	Test Condition	Min	Typ	Max	Unit
Tuning frequency range	F_{RANGE}		195	—	358	MHz
Max usable input level, 0.1% BER	SAT_{2k4}	Desired is reference 2.4 kbps GFSK signal[1]	—	10	—	dBm
Max usable input level, 0.1% BER	SAT_{38k4}	Desired is reference 38.4 kbps GFSK signal[2]	—	10	—	dBm
Sensitivity	SENS	Desired is reference 2.4 kbps GFSK signal[1], 0.1% BER, T ≤ 85 °C	—	-123.2	-120.7	dBm
		Desired is reference 38.4 kbps GFSK signal[2], 0.1% BER, T ≤ 85 °C	—	-111.4	-108.6	dBm
		Desired is reference 500 kbps GFSK signal[3], 0.1% BER, T ≤ 85 °C	—	-98.8	-95.5	dBm
Level above which RFSENSE will trigger[4]	$RFSENSE_{TRIG}$	CW at 315 MHz	—	-28.1	—	dBm
Level below which RFSENSE will not trigger[4]	$RFSENSE_{THRES}$	CW at 315 MHz	—	-50	—	dBm
Adjacent channel selectivity, Interferer is CW at ± 1 × channel-spacing	C/I_1	Desired is 2.4 kbps GFSK signal[1] at 3dB above sensitivity level, 0.1% BER	54.1	63.6	—	dB
		Desired is 38.4kbps GFSK signal[2] at 3dB above sensitivity level, 0.1% BER	—	49.9	—	dB
Alternate channel selectivity, Interferer is CW at ± 2 × channel-spacing	C/I_2	Desired is 2.4kbps GFSK signal[1] at 3dB above sensitivity level, 0.1% BER	—	64.2	—	dB
		Desired is 38.4kbps GFSK signal[2] at 3dB above sensitivity level[2], 0.1% BER	—	56.2	—	dB
Image rejection, Interferer is CW at image frequency	C/I_{IMAGE}	Desired is 2.4kbps GFSK signal[1] at 3dB above sensitivity level, 0.1% BER	—	53	—	dB
		Desired is 38.4kbps GFSK signal[2] at 3dB above sensitivity level, 0.1% BER	—	51.4	—	dB
Blocking selectivity, 0.1% BER. Desired is 2.4 kbps GFSK signal[1] at 3 dB above sensitivity level	$C/I_{BLOCKER}$	Interferer CW at Desired ± 1 MHz	—	75	—	dB
		Interferer CW at Desired ± 2 MHz	—	76.5	—	dB
		Interferer CW at Desired ± 10 MHz	72.6	91.9	—	dB

Parameter	Symbol	Test Condition	Min	Typ	Max	Unit
Upper limit of input power range over which RSSI resolution is maintained	$RSSI_{MAX}$		—	—	5	dBm
Lower limit of input power range over which RSSI resolution is maintained	$RSSI_{MIN}$		-98	—	—	dBm
RSSI resolution	$RSSI_{RES}$	Over $RSSI_{MIN}$ to $RSSI_{MAX}$ range	—	0.25	—	dBm
Max spurious emissions during active receive mode, per FCC Part 15.109(a)	$SPUR_{RX_FCC}$	216-960 MHz	—	-63	-57	dBm
		Above 960MHz	—	-53	-47	dBm

Note:

1. Definition of reference signal is 2.4 kbps 2GFSK, BT=0.5, Δf = 1.2 kHz, RX channel BW = 4.798 kHz, channel spacing = 12.5 kHz.
2. Definition of reference signal is 38.4 kbps 2GFSK, BT=0.5, Δf = 20 kHz, RX channel BW = 74.809 kHz, channel spacing = 100 kHz.
3. Definition of reference signal is 500 kbps 2GFSK, BT=0.5, Δf = 125 kHz, RX channel BW = 753.320 kHz.
4. RFSENSE performance is only valid from 0 to 85 °C. RFSENSE should be disabled outside this temperature range.

4.1.10.11 Sub-GHz RF Transmitter Characteristics for 169 MHz Band

Unless otherwise indicated, typical conditions are: T = 25 °C, VREGVDD = AVDD = IOVDD = 3.3 V, DVDD = RFVDD = External PA Supply. RFVDD and external PA supply paths filtered using ferrites. Crystal frequency = 38.4 MHz. RF center frequency 169 MHz.

Table 4.30. Sub-GHz RF Transmitter Characteristics for 169 MHz Band

Parameter	Symbol	Test Condition	Min	Typ	Max	Unit
RF tuning frequency range	F_{RANGE}		169	—	170	MHz
Maximum TX Power[1]	$POUT_{MAX}$	External PA supply = 3.3 V	18.1	19.7	22.4	dBm
Minimum active TX Power	$POUT_{MIN}$			-42.6	—	dBm
Output power step size	$POUT_{STEP}$	output power > 0 dBm	—	0.5	—	dB
Output power variation vs supply, peak to peak	$POUT_{VAR_V}$	1.8 V < $V_{VREGVDD}$ < 3.3 V, External PA supply = 3.3 V, T = 25 °C	—	4.8	5.0	dB
Output power variation vs temperature, peak to peak	$POUT_{VAR_T}$	-40 to +85 °C at 20 dBm	—	0.6	1.2	dB
Spurious emissions of harmonics, Conducted measurement, External PA supply = 3.3 V, Test Frequency = 169 MHz	$SPUR_{HARM_ETSI}$	Per ETSI EN 300-220, Section 7.8.2.1 (47-74 MHz, 87.5-118 MHz, 174-230 MHz, and 470-862 MHz)	—	-42	—	dBm
		Per ETSI EN 300-220, Section 7.8.2.1 (other frequencies below 1 GHz)[2]	—	-38	—	dBm
		Per ETSI EN 300-220, Section 7.8.2.1 (frequencies above 1 GHz)[2]	—	-36	—	dBm
Spurious emissions out-of-band, Conducted measurement, External PA supply = 3.3 V, Test Frequency = 169 MHz	$SPUR_{OOB_ETSI}$	Per ETSI EN 300-220, Section 7.8.2.1 (47-74 MHz, 87.5-118 MHz, 174-230 MHz, and 470-862 MHz)	—	-42	-36	dBm
		Per ETSI EN 300-220, Section 7.8.2.1 (other frequencies below 1 GHz)	—	-42	-36	dBm
		Per ETSI EN 300-220, Section 7.8.2.1 (frequencies above 1 GHz)	—	-36	-30	dBm

Note:

1. Supported transmit power levels are determined by the ordering part number (OPN). Transmit power ratings for all devices covered in this datasheet can be found in the Max TX Power column of the Ordering Information Table.
2. Typical value marginally passes specification. Additional margin can be obtained by increasing the order of the harmonic filter.

4.1.10.12 Sub-GHz RF Receiver Characteristics for 169 MHz Band

Unless otherwise indicated, typical conditions are: T = 25 °C, VREGVDD = AVDD = IOVDD = 3.3 V, DVDD = RFVDD = External PA Supply. RFVDD and external PA supply paths filtered using ferrites. Crystal frequency = 38.4 MHz. RF center frequency 169 MHz.

Table 4.31. Sub-GHz RF Receiver Characteristics for 169 MHz Band

Parameter	Symbol	Test Condition	Min	Typ	Max	Unit
Tuning frequency range	F_{RANGE}		169	—	170	MHz
Max usable input level, 0.1% BER	SAT_{2k4}	Desired is reference 2.4 kbps GFSK signal[1]	—	10	—	dBm
Max usable input level, 0.1% BER	SAT_{38k4}	Desired is reference 38.4 kbps GFSK signal[2]	—	10	—	dBm
Sensitivity	SENS	Desired is reference 2.4 kbps GFSK signal[1], 0.1% BER	—	-124	—	dBm
		Desired is reference 38.4 kbps GFSK signal[2], 0.1% BER, T ≤ 85 °C	—	-112.2	-108	dBm
		Desired is reference 500 kbps GFSK signal[3], 0.1% BER, T ≤ 85 °C	—	-99.2	-96	dBm
Level above which RFSENSE will trigger[4]	$RFSENSE_{TRIG}$	CW at 169 MHz	—	-28.1	—	dBm
Level below which RFSENSE will not trigger[4]	$RFSENSE_{THRES}$	CW at 169 MHz	—	-50	—	dBm
Adjacent channel selectivity, Interferer is CW at ± 1 x channel-spacing	C/I_1	Desired is 2.4 kbps GFSK signal[1] at 3dB above sensitivity level, 0.1% BER	—	64.8	—	dB
		Desired is 38.4kbps GFSK signal[1] at 3dB above sensitivity level, 0.1% BER	43.3	51.4	—	dB
Alternate channel selectivity, Interferer is CW at ± 2 x channel-spacing	C/I_2	Desired is 2.4kbps GFSK signal[1] at 3dB above sensitivity level, 0.1% BER	—	67.4	—	dB
		Desired is 38.4kbps GFSK signal[2] at 3dB above sensitivity level, 0.1% BER	—	60.6	—	dB
Image rejection, Interferer is CW at image frequency	C/I_{IMAGE}	Desired is 2.4kbps GFSK signal[1] at 3dB above sensitivity level, 0.1% BER	—	47.1	—	dB
		Desired is 38.4kbps GFSK signal[2] at 3dB above sensitivity level, 0.1% BER	—	47.1	—	dB
Blocking selectivity, 0.1% BER. Desired is 2.4 kbps GFSK signal[1] at 3 dB above sensitivity level	$C/I_{BLOCKER}$	Interferer CW at Desired ± 1 MHz	—	73.4	—	dB
		Interferer CW at Desired ± 2 MHz	—	75	—	dB
		Interferer CW at Desired ± 10 MHz	80	90.1	—	dB
Upper limit of input power range over which RSSI resolution is maintained	$RSSI_{MAX}$		—	—	5	dBm

Parameter	Symbol	Test Condition	Min	Typ	Max	Unit
Lower limit of input power range over which RSSI resolution is maintained	$RSSI_{MIN}$		-98	—	—	dBm
RSSI resolution	$RSSI_{RES}$	Over $RSSI_{MIN}$ to $RSSI_{MAX}$ range	—	0.25	—	dBm
Max spurious emissions during active receive mode	$SPUR_{RX}$	30 MHz to 1 GHz	—	-63	-57	dBm
		1 GHz to 12 GHz	—	-53	-47	dBm

Note:

1. Definition of reference signal is 2.4 kbps 2GFSK, BT=0.5, Δf = 1.2 kHz, RX channel BW = 4.798 kHz, channel spacing = 12.5 kHz.
2. Definition of reference signal is 38.4 kbps 2GFSK, BT=0.5, Δf = 20 kHz, RX channel BW = 74.809 kHz, channel spacing = 100 kHz.
3. Definition of reference signal is 500 kbps 2GFSK, BT=0.5, Δf = 125 kHz, RX channel BW = 753.320 kHz.
4. RFSENSE performance is only valid from 0 to 85 °C. RFSENSE should be disabled outside this temperature range.

4.1.11 Modem

Table 4.32. Modem

Parameter	Symbol	Test Condition	Min	Typ	Max	Unit
Receive bandwidth	BW_{RX}	Configurable range with 38.4 MHz crystal	0.1	—	2530	kHz
IF frequency	f_{IF}	Configurable range with 38.4 MHz crystal. Selected steps available.	150	—	1371	kHz
DSSS symbol length	SL_{DSSS}	Configurable in steps of 1 chip	2	—	32	chips
DSSS bits per symbol	BPS_{DSSS}	Configurable	1	—	4	bits/ symbol

4.1.12 Oscillators

4.1.12.1 Low-Frequency Crystal Oscillator (LFXO)

Table 4.33. Low-Frequency Crystal Oscillator (LFXO)

Parameter	Symbol	Test Condition	Min	Typ	Max	Unit
Crystal frequency	f_{LFXO}		—	32.768	—	kHz
Supported crystal equivalent series resistance (ESR)	ESR_{LFXO}		—	—	70	kΩ
Supported range of crystal load capacitance [1]	C_{LFXO_CL}		6	—	18	pF
On-chip tuning cap range [2]	C_{LFXO_T}	On each of LFXTAL_N and LFXTAL_P pins	8	—	40	pF
On-chip tuning cap step size	SS_{LFXO}		—	0.25	—	pF
Current consumption after startup [3]	I_{LFXO}	ESR = 70 kOhm, C_L = 7 pF, GAIN[4] = 2, AGC[4] = 1	—	273	—	nA
Start- up time	t_{LFXO}	ESR = 70 kOhm, C_L = 7 pF, GAIN[4] = 2	—	308	—	ms

Note:

1. Total load capacitance as seen by the crystal.
2. The effective load capacitance seen by the crystal will be C_{LFXO_T} /2. This is because each XTAL pin has a tuning cap and the two caps will be seen in series by the crystal.
3. Block is supplied by AVDD if ANASW = 0, or DVDD if ANASW=1 in EMU_PWRCTRL register.
4. In CMU_LFXOCTRL register.

4.1.12.2 High-Frequency Crystal Oscillator (HFXO)

Table 4.34. High-Frequency Crystal Oscillator (HFXO)

Parameter	Symbol	Test Condition	Min	Typ	Max	Unit
Crystal frequency	f_{HFXO}	38.4 MHz required for radio transciever operation	38	38.4	40	MHz
Supported crystal equivalent series resistance (ESR)	ESR_{HFXO_38M4}	Crystal frequency 38.4 MHz	—	—	60	Ω
Supported range of crystal load capacitance [1]	C_{HFXO_CL}		6	—	12	pF
On-chip tuning cap range [2]	C_{HFXO_T}	On each of HFXTAL_N and HFXTAL_P pins	9	20	25	pF
On-chip tuning capacitance step	SS_{HFXO}		—	0.04	—	pF
Startup time	t_{HFXO}	38.4 MHz, ESR = 50 Ohm, C_L = 10 pF	—	300	—	µs
Frequency tolerance for the crystal	FT_{HFXO}	38.4 MHz, ESR = 50 Ohm, C_L = 10 pF	-40	—	40	ppm

Note:
1. Total load capacitance as seen by the crystal.
2. The effective load capacitance seen by the crystal will be C_{HFXO_T} /2. This is because each XTAL pin has a tuning cap and the two caps will be seen in series by the crystal.

4.1.12.3 Low-Frequency RC Oscillator (LFRCO)

Table 4.35. Low-Frequency RC Oscillator (LFRCO)

Parameter	Symbol	Test Condition	Min	Typ	Max	Unit
Oscillation frequency	f_{LFRCO}	ENVREF[1] = 1, T ≤ 85 °C	31.3	32.768	33.6	kHz
		ENVREF[1] = 1, T > 85 °C	31.6	32.768	36.8	kHz
		ENVREF[1] = 0, T ≤ 85 °C	31.3	32.768	33.4	kHz
		ENVREF[1] = 0, T > 85 °C	30.0	32.768	33.4	kHz
Startup time	t_{LFRCO}		—	500	—	µs
Current consumption [2]	I_{LFRCO}	ENVREF = 1 in CMU_LFRCOCTRL	—	370	—	nA
		ENVREF = 0 in CMU_LFRCOCTRL	—	520	—	nA

Note:
1. In CMU_LFRCOCTRL register.
2. Block is supplied by AVDD if ANASW = 0, or DVDD if ANASW=1 in EMU_PWRCTRL register.

4.1.12.4 High-Frequency RC Oscillator (HFRCO)

Table 4.36. High-Frequency RC Oscillator (HFRCO)

Parameter	Symbol	Test Condition	Min	Typ	Max	Unit
Frequency accuracy	f_{HFRCO_ACC}	At production calibrated frequencies, across supply voltage and temperature	-2.5	—	2.5	%
Start-up time	t_{HFRCO}	$f_{HFRCO} \geq 19$ MHz	—	300	—	ns
		$4 < f_{HFRCO} < 19$ MHz	—	1	—	µs
		$f_{HFRCO} \leq 4$ MHz	—	2.5	—	µs
Current consumption on all supplies	I_{HFRCO}	$f_{HFRCO} = 38$ MHz	—	244	265	µA
		$f_{HFRCO} = 32$ MHz	—	204	222	µA
		$f_{HFRCO} = 26$ MHz	—	173	188	µA
		$f_{HFRCO} = 19$ MHz	—	143	156	µA
		$f_{HFRCO} = 16$ MHz	—	123	136	µA
		$f_{HFRCO} = 13$ MHz	—	110	124	µA
		$f_{HFRCO} = 7$ MHz	—	85	94	µA
		$f_{HFRCO} = 4$ MHz	—	32	37	µA
		$f_{HFRCO} = 2$ MHz	—	28	34	µA
		$f_{HFRCO} = 1$ MHz	—	26	31	µA
Coarse trim step size (% of period)	SS_{HFRCO_COARSE}		—	0.8	—	%
Fine trim step size (% of period)	SS_{HFRCO_FINE}		—	0.1	—	%
Period jitter	PJ_{HFRCO}		—	0.2	—	% RMS

4.1.12.5 Auxiliary High-Frequency RC Oscillator (AUXHFRCO)

Table 4.37. Auxiliary High-Frequency RC Oscillator (AUXHFRCO)

Parameter	Symbol	Test Condition	Min	Typ	Max	Unit
Frequency accuracy	$f_{AUXHFRCO_ACC}$	At production calibrated frequencies, across supply voltage and temperature	-3	—	3	%
Start-up time	$t_{AUXHFRCO}$	$f_{AUXHFRCO} \geq 19$ MHz	—	400	—	ns
		$4 < f_{AUXHFRCO} < 19$ MHz	—	1.4	—	µs
		$f_{AUXHFRCO} \leq 4$ MHz	—	2.5	—	µs
Current consumption on all supplies	$I_{AUXHFRCO}$	$f_{AUXHFRCO} = 38$ MHz	—	193	213	µA
		$f_{AUXHFRCO} = 32$ MHz	—	157	175	µA
		$f_{AUXHFRCO} = 26$ MHz	—	135	151	µA
		$f_{AUXHFRCO} = 19$ MHz	—	108	122	µA
		$f_{AUXHFRCO} = 16$ MHz	—	100	113	µA
		$f_{AUXHFRCO} = 13$ MHz	—	77	88	µA
		$f_{AUXHFRCO} = 7$ MHz	—	53	63	µA
		$f_{AUXHFRCO} = 4$ MHz	—	29	36	µA
		$f_{AUXHFRCO} = 2$ MHz	—	28	34	µA
		$f_{AUXHFRCO} = 1$ MHz	—	27	31	µA
Coarse trim step size (% of period)	$SS_{AUXHFRCO_COARSE}$		—	0.8	—	%
Fine trim step size (% of period)	$SS_{AUXHFRCO_FINE}$		—	0.1	—	%
Period jitter	$PJ_{AUXHFRCO}$		—	0.2	—	% RMS

4.1.12.6 Ultra-low Frequency RC Oscillator (ULFRCO)

Table 4.38. Ultra-low Frequency RC Oscillator (ULFRCO)

Parameter	Symbol	Test Condition	Min	Typ	Max	Unit
Oscillation frequency	f_{ULFRCO}		0.95	1	1.07	kHz

4.1.13 Flash Memory Characteristics[1]

Table 4.39. Flash Memory Characteristics[1]

Parameter	Symbol	Test Condition	Min	Typ	Max	Unit
Flash erase cycles before failure	EC_{FLASH}		10000	—	—	cycles
Flash data retention	RET_{FLASH}	T ≤ 85 °C	10	—	—	years
		T ≤ 125 °C	10	—	—	years
Word (32-bit) programming time	t_{W_PROG}	Burst write, 128 words, average time per word	20	24.4	30	µs
		Single word	60	68.4	80	µs
Page erase time[2]	t_{PERASE}		20	26.4	35	ms
Mass erase time[3]	t_{MERASE}		20	26.5	35	ms
Device erase time[4] [5]	t_{DERASE}	T ≤ 85 °C	—	82	100	ms
		T ≤ 125 °C	—	82	110	ms
Erase current[6]	I_{ERASE}	Page Erase	—	—	1.6	mA
Write current[6]	I_{WRITE}		—	—	3.8	mA
Supply voltage during flash erase and write	V_{FLASH}		1.62	—	3.6	V

Note:

1. Flash data retention information is published in the Quarterly Quality and Reliability Report.
2. From setting the ERASEPAGE bit in MSC_WRITECMD to 1 until the BUSY bit in MSC_STATUS is cleared to 0. Internal setup and hold times for flash control signals are included.
3. Mass erase is issued by the CPU and erases all flash.
4. Device erase is issued over the AAP interface and erases all flash, SRAM, the Lock Bit (LB) page, and the User data page Lock Word (ULW).
5. From setting the DEVICEERASE bit in AAP_CMD to 1 until the ERASEBUSY bit in AAP_STATUS is cleared to 0. Internal setup and hold times for flash control signals are included.
6. Measured at 25 °C.

4.1.14 General-Purpose I/O (GPIO)

Table 4.40. General-Purpose I/O (GPIO)

Parameter	Symbol	Test Condition	Min	Typ	Max	Unit
Input low voltage[1]	V_{IL}	GPIO pins	—	—	IOVDD*0.3	V
Input high voltage[1]	V_{IH}	GPIO pins	IOVDD*0.7	—	—	V
Output high voltage relative to IOVDD	V_{OH}	Sourcing 3 mA, IOVDD ≥ 3 V, DRIVESTRENGTH[2] = WEAK	IOVDD*0.8	—	—	V
		Sourcing 1.2 mA, IOVDD ≥ 1.62 V, DRIVESTRENGTH[2] = WEAK	IOVDD*0.6	—	—	V
		Sourcing 20 mA, IOVDD ≥ 3 V, DRIVESTRENGTH[2] = STRONG	IOVDD*0.8	—	—	V
		Sourcing 8 mA, IOVDD ≥ 1.62 V, DRIVESTRENGTH[2] = STRONG	IOVDD*0.6	—	—	V
Output low voltage relative to IOVDD	V_{OL}	Sinking 3 mA, IOVDD ≥ 3 V, DRIVESTRENGTH[2] = WEAK	—	—	IOVDD*0.2	V
		Sinking 1.2 mA, IOVDD ≥ 1.62 V, DRIVESTRENGTH[2] = WEAK	—	—	IOVDD*0.4	V
		Sinking 20 mA, IOVDD ≥ 3 V, DRIVESTRENGTH[2] = STRONG	—	—	IOVDD*0.2	V
		Sinking 8 mA, IOVDD ≥ 1.62 V, DRIVESTRENGTH[2] = STRONG	—	—	IOVDD*0.4	V
Input leakage current	I_{IOLEAK}	All GPIO except LFXO pins, GPIO ≤ IOVDD, T ≤ 85 °C	—	0.1	30	nA
		LFXO Pins, GPIO ≤ IOVDD, T ≤ 85 °C	—	0.1	50	nA
		All GPIO except LFXO pins, GPIO ≤ IOVDD, T > 85 °C	—	—	110	nA
		LFXO Pins, GPIO ≤ IOVDD, T > 85 °C	—	—	250	nA
Input leakage current on 5VTOL pads above IOVDD	$I_{5VTOLLEAK}$	IOVDD < GPIO ≤ IOVDD + 2 V	—	3.3	15	µA
I/O pin pull-up/pull-down resistor[3]	R_{PUD}		30	40	65	kΩ
Pulse width of pulses removed by the glitch suppression filter	$t_{IOGLITCH}$		15	25	45	ns

Parameter	Symbol	Test Condition	Min	Typ	Max	Unit
Output fall time, From 70% to 30% of V_{IO}	t_{IOOF}	C_L = 50 pF, DRIVESTRENGTH[2] = STRONG, SLEWRATE[2] = 0x6	—	1.8	—	ns
		C_L = 50 pF, DRIVESTRENGTH[2] = WEAK, SLEWRATE[2] = 0x6	—	4.5	—	ns
Output rise time, From 30% to 70% of V_{IO}	t_{IOOR}	C_L = 50 pF, DRIVESTRENGTH[2] = STRONG, SLEWRATE = 0x6[2]	—	2.2	—	ns
		C_L = 50 pF, DRIVESTRENGTH[2] = WEAK, SLEWRATE[2] = 0x6	—	7.4	—	ns

Note:

1. GPIO input threshold are proportional to the IOVDD supply, except for RESETn which is proportional to AVDD.
2. In GPIO_Pn_CTRL register.
3. GPIO pull-ups are referenced to the IOVDD supply, except for RESETn, which connects to AVDD.

4.1.15 Voltage Monitor (VMON)

Table 4.41. Voltage Monitor (VMON)

Parameter	Symbol	Test Condition	Min	Typ	Max	Unit
Supply current (including I_SENSE)	I_{VMON}	In EM0 or EM1, 1 active channel, T ≤ 85 °C	—	6.3	10	µA
		In EM0 or EM1, 1 active channel, T > 85 °C	—	—	14	µA
		In EM0 or EM1, All channels active, T ≤ 85 °C	—	12.5	17	µA
		In EM0 or EM1, All channels active, T > 85 °C	—	—	21	µA
		In EM2, EM3 or EM4, 1 channel active and above threshold	—	62	—	nA
		In EM2, EM3 or EM4, 1 channel active and below threshold	—	62	—	nA
		In EM2, EM3 or EM4, All channels active and above threshold	—	99	—	nA
		In EM2, EM3 or EM4, All channels active and below threshold	—	99	—	nA
Loading of monitored supply	I_{SENSE}	In EM0 or EM1	—	2	—	µA
		In EM2, EM3 or EM4	—	2	—	nA
Threshold range	V_{VMON_RANGE}		1.62	—	3.4	V
Threshold step size	N_{VMON_STESP}	Coarse	—	200	—	mV
		Fine	—	20	—	mV
Response time	t_{VMON_RES}	Supply drops at 1V/µs rate	—	460	—	ns
Hysteresis	V_{VMON_HYST}		—	26	—	mV

4.1.16 Analog to Digital Converter (ADC)

Specified at 1 Msps, ADCCLK = 16 MHz, BIASPROG = 0, GPBIASACC = 0, unless otherwise indicated.

Table 4.42. Analog to Digital Converter (ADC)

Parameter	Symbol	Test Condition	Min	Typ	Max	Unit
Resolution	$V_{RESOLUTION}$		6	—	12	Bits
Input voltage range[1]	V_{ADCIN}	Single ended	—	—	V_{FS}	V
		Differential	$-V_{FS}/2$	—	$V_{FS}/2$	V
Input range of external reference voltage, single ended and differential	$V_{ADCREFIN_P}$		1	—	V_{AVDD}	V
Power supply rejection[2]	$PSRR_{ADC}$	At DC	—	80	—	dB
Analog input common mode rejection ratio	$CMRR_{ADC}$	At DC	—	80	—	dB
Current from all supplies, using internal reference buffer. Continuous operation. WARMUPMODE[3] = KEEPADCWARM	$I_{ADC_CONTINUOUS_LP}$	1 Msps / 16 MHz ADCCLK, BIASPROG = 0, GPBIASACC = 1 [4]	—	270	315	µA
		250 ksps / 4 MHz ADCCLK, BIASPROG = 6, GPBIASACC = 1 [4]	—	125	—	µA
		62.5 ksps / 1 MHz ADCCLK, BIASPROG = 15, GPBIASACC = 1 [4]	—	80	—	µA
Current from all supplies, using internal reference buffer. Duty-cycled operation. WARMUPMODE[3] = NORMAL	$I_{ADC_NORMAL_LP}$	35 ksps / 16 MHz ADCCLK, BIASPROG = 0, GPBIASACC = 1 [4]	—	45	—	µA
		5 ksps / 16 MHz ADCCLK BIASPROG = 0, GPBIASACC = 1 [4]	—	8	—	µA
Current from all supplies, using internal reference buffer. Duty-cycled operation. AWARMUPMODE[3] = KEEPINSTANDBY or KEEPINSLOWACC	$I_{ADC_STANDBY_LP}$	125 ksps / 16 MHz ADCCLK, BIASPROG = 0, GPBIASACC = 1 [4]	—	105	—	µA
		35 ksps / 16 MHz ADCCLK, BIASPROG = 0, GPBIASACC = 1 [4]	—	70	—	µA
Current from all supplies, using internal reference buffer. Continuous operation. WARMUPMODE[3] = KEEPADCWARM	$I_{ADC_CONTINUOUS_HP}$	1 Msps / 16 MHz ADCCLK, BIASPROG = 0, GPBIASACC = 0 [4]	—	325	—	µA
		250 ksps / 4 MHz ADCCLK, BIASPROG = 6, GPBIASACC = 0 [4]	—	175	—	µA
		62.5 ksps / 1 MHz ADCCLK, BIASPROG = 15, GPBIASACC = 0 [4]	—	125	—	µA
Current from all supplies, using internal reference buffer. Duty-cycled operation. WARMUPMODE[3] = NORMAL	$I_{ADC_NORMAL_HP}$	35 ksps / 16 MHz ADCCLK, BIASPROG = 0, GPBIASACC = 0 [4]	—	85	—	µA
		5 ksps / 16 MHz ADCCLK BIASPROG = 0, GPBIASACC = 0 [4]	—	16	—	µA
Current from all supplies, using internal reference buffer. Duty-cycled operation. AWARMUPMODE[3] = KEEPINSTANDBY or KEEPINSLOWACC	$I_{ADC_STANDBY_HP}$	125 ksps / 16 MHz ADCCLK, BIASPROG = 0, GPBIASACC = 0 [4]	—	160	—	µA
		35 ksps / 16 MHz ADCCLK, BIASPROG = 0, GPBIASACC = 0 [4]	—	125	—	µA
Current from HFPERCLK	I_{ADC_CLK}	HFPERCLK = 16 MHz	—	160	—	µA

Parameter	Symbol	Test Condition	Min	Typ	Max	Unit
ADC clock frequency	f_{ADCCLK}		—	—	16	MHz
Throughput rate	$f_{ADCRATE}$		—	—	1	Msps
Conversion time[5]	$t_{ADCCONV}$	6 bit	—	7	—	cycles
		8 bit	—	9	—	cycles
		12 bit	—	13	—	cycles
Startup time of reference generator and ADC core	$t_{ADCSTART}$	WARMUPMODE[3] = NORMAL	—	—	5	µs
		WARMUPMODE[3] = KEEPIN-STANDBY	—	—	2	µs
		WARMUPMODE[3] = KEEPINSLO-WACC	—	—	1	µs
SNDR at 1Msps and f_{IN} = 10kHz	$SNDR_{ADC}$	Internal reference[6], differential measurement	58	67	—	dB
		External reference[7], differential measurement	—	68	—	dB
Spurious-free dynamic range (SFDR)	$SFDR_{ADC}$	1 MSamples/s, 10 kHz full-scale sine wave	—	75	—	dB
Differential non-linearity (DNL)	DNL_{ADC}	12 bit resolution, No missing co-des	-1	—	2	LSB
Integral non-linearity (INL), End point method	INL_{ADC}	12 bit resolution	-6	—	6	LSB
Offset error	$V_{ADCOFFSETERR}$		-3	0	3	LSB
Gain error in ADC	$V_{ADCGAIN}$	Using internal reference	—	-0.2	3.5	%
		Using external reference	—	-1	—	%
Temperature sensor slope	V_{TS_SLOPE}		—	-1.84	—	mV/°C

Note:

1. The absolute voltage allowed at any ADC input is dictated by the power rail supplied to on-chip circuitry, and may be lower than the effective full scale voltage. All ADC inputs are limited to the ADC supply (AVDD or DVDD depending on EMU_PWRCTRL_ANASW). Any ADC input routed through the APORT will further be limited by the IOVDD supply to the pin.
2. PSRR is referenced to AVDD when ANASW=0 and to DVDD when ANASW=1 in EMU_PWRCTRL.
3. In ADCn_CTRL register.
4. In ADCn_BIASPROG register.
5. Derived from ADCCLK.
6. Internal reference option used corresponds to selection 2V5 in the SINGLECTRL_REF or SCANCTRL_REF register field. The differential input range with this configuration is ± 1.25 V. Typical value is characterized using full-scale sine wave input. Minimum value is production-tested using sine wave input at 1.5 dB lower than full scale.
7. External reference is 1.25 V applied externally to ADCnEXTREFP, with the selection CONF in the SINGLECTRL_REF or SCANCTRL_REF register field and VREFP in the SINGLECTRLX_VREFSEL or SCANCTRLX_VREFSEL field. The differential input range with this configuration is ± 1.25 V.

4.1.17 Analog Comparator (ACMP)

Table 4.43. Analog Comparator (ACMP)

Parameter	Symbol	Test Condition	Min	Typ	Max	Unit
Input voltage range	V_{ACMPIN}	ACMPVDD = ACMPn_CTRL_PWRSEL [1]	—	—	$V_{ACMPVDD}$	V
Supply voltage	$V_{ACMPVDD}$	BIASPROG[2] ≤ 0x10 or FULLBIAS[2] = 0	1.8	—	$V_{VREGVDD_MAX}$	V
		0x10 < BIASPROG[2] ≤ 0x20 and FULLBIAS[2] = 1	2.1	—	$V_{VREGVDD_MAX}$	V
Active current not including voltage reference[3]	I_{ACMP}	BIASPROG[2] = 1, FULLBIAS[2] = 0	—	50	—	nA
		BIASPROG[2] = 0x10, FULLBIAS[2] = 0	—	306	—	nA
		BIASPROG[2] = 0x02, FULLBIAS[2] = 1	—	6.5	—	µA
		BIASPROG[2] = 0x20, FULLBIAS[2] = 1	—	75	92	µA
Current consumption of internal voltage reference[3]	$I_{ACMPREF}$	VLP selected as input using 2.5 V Reference / 4 (0.625 V)	—	50	—	nA
		VLP selected as input using VDD	—	20	—	nA
		VBDIV selected as input using 1.25 V reference / 1	—	4.1	—	µA
		VADIV selected as input using VDD/1	—	2.4	—	µA

Parameter	Symbol	Test Condition	Min	Typ	Max	Unit
Hysteresis (V_{CM} = 1.25 V, BIASPROG[2] = 0x10, FULL-BIAS[2] = 1)	$V_{ACMPHYST}$	HYSTSEL[4] = HYST0	-3	0	3	mV
		HYSTSEL[4] = HYST1	5	18	27	mV
		HYSTSEL[4] = HYST2	12	33	50	mV
		HYSTSEL[4] = HYST3	17	46	65	mV
		HYSTSEL[4] = HYST4	23	57	82	mV
		HYSTSEL[4] = HYST5	26	68	98	mV
		HYSTSEL[4] = HYST6	30	79	130	mV
		HYSTSEL[4] = HYST7	34	90	150	mV
		HYSTSEL[4] = HYST8	-3	0	3	mV
		HYSTSEL[4] = HYST9	-27	-18	-5	mV
		HYSTSEL[4] = HYST10	-50	-33	-12	mV
		HYSTSEL[4] = HYST11	-65	-45	-17	mV
		HYSTSEL[4] = HYST12	-82	-57	-23	mV
		HYSTSEL[4] = HYST13	-98	-67	-26	mV
		HYSTSEL[4] = HYST14	-130	-78	-30	mV
		HYSTSEL[4] = HYST15	-150	-88	-34	mV
Comparator delay[5]	$t_{ACMPDELAY}$	BIASPROG[2] = 1, FULLBIAS[2] = 0	—	30	—	µs
		BIASPROG[2] = 0x10, FULLBIAS[2] = 0	—	3.7	—	µs
		BIASPROG[2] = 0x02, FULLBIAS[2] = 1	—	360	—	ns
		BIASPROG[2] = 0x20, FULLBIAS[2] = 1	—	35	—	ns
Offset voltage	$V_{ACMPOFFSET}$	BIASPROG[2] =0x10, FULLBIAS[2] = 1	-35	—	35	mV
Reference voltage	$V_{ACMPREF}$	Internal 1.25 V reference	1	1.25	1.47	V
		Internal 2.5 V reference	2	2.5	2.8	V
Capacitive sense internal re-sistance	R_{CSRES}	CSRESSEL[6] = 0	—	infinite	—	kΩ
		CSRESSEL[6] = 1	—	15	—	kΩ
		CSRESSEL[6] = 2	—	27	—	kΩ
		CSRESSEL[6] = 3	—	39	—	kΩ
		CSRESSEL[6] = 4	—	51	—	kΩ
		CSRESSEL[6] = 5	—	100	—	kΩ
		CSRESSEL[6] = 6	—	162	—	kΩ
		CSRESSEL[6] = 7	—	235	—	kΩ

Parameter	Symbol	Test Condition	Min	Typ	Max	Unit

Note:

1. ACMPVDD is a supply chosen by the setting in ACMPn_CTRL_PWRSEL and may be IOVDD, AVDD or DVDD.
2. In ACMPn_CTRL register.
3. The total ACMP current is the sum of the contributions from the ACMP and its internal voltage reference. $I_{ACMPTOTAL} = I_{ACMP} + I_{ACMPREF}$.
4. In ACMPn_HYSTERESIS registers.
5. ± 100 mV differential drive.
6. In ACMPn_INPUTSEL register.

4.1.18 Digital to Analog Converter (VDAC)

DRIVESTRENGTH = 2 unless otherwise specified. Primary VDAC output.

Table 4.44. Digital to Analog Converter (VDAC)

Parameter	Symbol	Test Condition	Min	Typ	Max	Unit
Output voltage	V_{DACOUT}	Single-Ended	0	—	V_{VREF}	V
		Differential[1]	$-V_{VREF}$	—	V_{VREF}	V
Current consumption including references (2 channels)[2]	I_{DAC}	500 ksps, 12-bit, DRIVESTRENGTH = 2, REFSEL = 4	—	396	—	µA
		44.1 ksps, 12-bit, DRIVESTRENGTH = 1, REFSEL = 4	—	72	—	µA
		200 Hz refresh rate, 12-bit Sample-Off mode in EM2, DRIVESTRENGTH = 2, REFSEL = 4, SETTLETIME = 0x02, WARMUPTIME = 0x0A	—	1.2	—	µA
Current from HFPERCLK[3]	I_{DAC_CLK}		—	5.8	—	µA/MHz
Sample rate	SR_{DAC}		—	—	500	ksps
DAC clock frequency	f_{DAC}		—	—	1	MHz
Conversion time	$t_{DACCONV}$	f_{DAC} = 1MHz	2	—	—	µs
Settling time	$t_{DACSETTLE}$	50% fs step settling to 5 LSB	—	2.5	—	µs
Startup time	$t_{DACSTARTUP}$	Enable to 90% fs output, settling to 10 LSB	—	—	12	µs
Output impedance	R_{OUT}	DRIVESTRENGTH = 2, 0.4 V ≤ V_{OUT} ≤ V_{OPA} - 0.4 V, -8 mA < I_{OUT} < 8 mA, Full supply range	—	2	—	Ω
		DRIVESTRENGTH = 0 or 1, 0.4 V ≤ V_{OUT} ≤ V_{OPA} - 0.4 V, -400 µA < I_{OUT} < 400 µA, Full supply range	—	2	—	Ω
		DRIVESTRENGTH = 2, 0.1 V ≤ V_{OUT} ≤ V_{OPA} - 0.1 V, -2 mA < I_{OUT} < 2 mA, Full supply range	—	2	—	Ω
		DRIVESTRENGTH = 0 or 1, 0.1 V ≤ V_{OUT} ≤ V_{OPA} - 0.1 V, -100 µA < I_{OUT} < 100 µA, Full supply range	—	2	—	Ω
Power supply rejection ratio[4]	PSRR	Vout = 50% fs. DC	—	65.5	—	dB

Parameter	Symbol	Test Condition	Min	Typ	Max	Unit
Signal to noise and distortion ratio (1 kHz sine wave), Noise band limited to 250 kHz	$SNDR_{DAC}$	500 ksps, single-ended, internal 1.25V reference	—	60.4	—	dB
		500 ksps, single-ended, internal 2.5V reference	—	61.6	—	dB
		500 ksps, single-ended, 3.3V VDD reference	—	64.0	—	dB
		500 ksps, differential, internal 1.25V reference	—	63.3	—	dB
		500 ksps, differential, internal 2.5V reference	—	64.4	—	dB
		500 ksps, differential, 3.3V VDD reference	—	65.8	—	dB
Signal to noise and distortion ratio (1 kHz sine wave), Noise band limited to 22 kHz	$SNDR_{DAC_BAND}$	500 ksps, single-ended, internal 1.25V reference	—	65.3	—	dB
		500 ksps, single-ended, internal 2.5V reference	—	66.7	—	dB
		500 ksps, single-ended, 3.3V VDD reference	—	70.0	—	dB
		500 ksps, differential, internal 1.25V reference	—	67.8	—	dB
		500 ksps, differential, internal 2.5V reference	—	69.0	—	dB
		500 ksps, differential, 3.3V VDD reference	—	68.5	—	dB
Total harmonic distortion	THD		—	70.2	—	dB
Differential non-linearity[5]	DNL_{DAC}		-0.99	—	1	LSB
Intergral non-linearity	INL_{DAC}		-4	—	4	LSB
Offset error[6]	V_{OFFSET}	T = 25 °C	-8	—	8	mV
		Across operating temperature range	-25	—	25	mV
Gain error[6]	V_{GAIN}	T = 25 °C, Low-noise internal reference (REFSEL = 1V25LN or 2V5LN)	-2.5	—	2.5	%
		T = 25 °C, Internal reference (REFSEL = 1V25 or 2V5)	-5	—	5	%
		T = 25 °C, External reference (REFSEL = VDD or EXT)	-1.8	—	1.8	%
		Across operating temperature range, Low-noise internal reference (REFSEL = 1V25LN or 2V5LN)	-3.5	—	3.5	%
		Across operating temperature range, Internal reference (REFSEL = 1V25 or 2V5)	-7.5	—	7.5	%
		Across operating temperature range, External reference (REFSEL = VDD or EXT)	-2.0	—	2.0	%

Parameter	Symbol	Test Condition	Min	Typ	Max	Unit
External load capactiance, OUTSCALE=0	C_{LOAD}		—	—	75	pF

Note:

1. In differential mode, the output is defined as the difference between two single-ended outputs. Absolute voltage on each output is limited to the single-ended range.
2. Supply current specifications are for VDAC circuitry operating with static output only and do not include current required to drive the load.
3. Current from HFPERCLK is dependent on HFPERCLK frequency. This current contributes to the total supply current used when the clock to the DAC peripheral is enabled in the CMU.
4. PSRR calculated as 20 * $\log_{10}(\Delta VDD / \Delta V_{OUT})$, VDAC output at 90% of full scale
5. Entire range is monotonic and has no missing codes.
6. Gain is calculated by measuring the slope from 10% to 90% of full scale. Offset is calculated by comparing actual VDAC output at 10% of full scale to ideal VDAC output at 10% of full scale with the measured gain.

4.1.19 Current Digital to Analog Converter (IDAC)

Table 4.45. Current Digital to Analog Converter (IDAC)

Parameter	Symbol	Test Condition	Min	Typ	Max	Unit
Number of ranges	N_{IDAC_RANGES}		—	4	—	ranges
Output current	I_{IDAC_OUT}	RANGESEL[1] = RANGE0	0.05	—	1.6	µA
		RANGESEL[1] = RANGE1	1.6	—	4.7	µA
		RANGESEL[1] = RANGE2	0.5	—	16	µA
		RANGESEL[1] = RANGE3	2	—	64	µA
Linear steps within each range	N_{IDAC_STEPS}		—	32	—	steps
Step size	SS_{IDAC}	RANGESEL[1] = RANGE0	—	50	—	nA
		RANGESEL[1] = RANGE1	—	100	—	nA
		RANGESEL[1] = RANGE2	—	500	—	nA
		RANGESEL[1] = RANGE3	—	2	—	µA
Total accuracy, STEPSEL[1] = 0x10	ACC_{IDAC}	EM0 or EM1, AVDD=3.3 V, T = 25 °C	-3	—	3	%
		EM0 or EM1, Across operating temperature range	-18	—	22	%
		EM2 or EM3, Source mode, RANGESEL[1] = RANGE0, AVDD=3.3 V, T = 25 °C	—	-2	—	%
		EM2 or EM3, Source mode, RANGESEL[1] = RANGE1, AVDD=3.3 V, T = 25 °C	—	-1.7	—	%
		EM2 or EM3, Source mode, RANGESEL[1] = RANGE2, AVDD=3.3 V, T = 25 °C	—	-0.8	—	%
		EM2 or EM3, Source mode, RANGESEL[1] = RANGE3, AVDD=3.3 V, T = 25 °C	—	-0.5	—	%
		EM2 or EM3, Sink mode, RANGESEL[1] = RANGE0, AVDD=3.3 V, T = 25 °C	—	-0.7	—	%
		EM2 or EM3, Sink mode, RANGESEL[1] = RANGE1, AVDD=3.3 V, T = 25 °C	—	-0.6	—	%
		EM2 or EM3, Sink mode, RANGESEL[1] = RANGE2, AVDD=3.3 V, T = 25 °C	—	-0.5	—	%
		EM2 or EM3, Sink mode, RANGESEL[1] = RANGE3, AVDD=3.3 V, T = 25 °C	—	-0.5	—	%
Start up time	t_{IDAC_SU}	Output within 1% of steady state value	—	5	—	µs

Parameter	Symbol	Test Condition	Min	Typ	Max	Unit
Settling time, (output settled within 1% of steady state value),	t_{IDAC_SETTLE}	Range setting is changed	—	5	—	µs
		Step value is changed	—	1	—	µs
Current consumption[2]	I_{IDAC}	EM0 or EM1 Source mode, excluding output current, Across operating temperature range	—	11	18	µA
		EM0 or EM1 Sink mode, excluding output current, Across operating temperature range	—	13	21	µA
		EM2 or EM3 Source mode, excluding output current, T = 25 °C	—	0.023	—	µA
		EM2 or EM3 Sink mode, excluding output current, T = 25 °C	—	0.041	—	µA
		EM2 or EM3 Source mode, excluding output current, T ≥ 85 °C	—	11	—	µA
		EM2 or EM3 Sink mode, excluding output current, T ≥ 85 °C	—	13	—	µA
Output voltage compliance in source mode, source current change relative to current sourced at 0 V	I_{COMP_SRC}	RANGESEL[1] = RANGE0, output voltage = min(V_{IOVDD}, V_{AVDD}[2]-100 mV)	—	0.11	—	%
		RANGESEL[1] = RANGE1, output voltage = min(V_{IOVDD}, V_{AVDD}[2]-100 mV)	—	0.06	—	%
		RANGESEL[1] = RANGE2, output voltage = min(V_{IOVDD}, V_{AVDD}[2]-150 mV)	—	0.04	—	%
		RANGESEL[1] = RANGE3, output voltage = min(V_{IOVDD}, V_{AVDD}[2]-250 mV)	—	0.03	—	%
Output voltage compliance in sink mode, sink current change relative to current sunk at IOVDD	I_{COMP_SINK}	RANGESEL[1] = RANGE0, output voltage = 100 mV	—	0.12	—	%
		RANGESEL[1] = RANGE1, output voltage = 100 mV	—	0.05	—	%
		RANGESEL[1] = RANGE2, output voltage = 150 mV	—	0.04	—	%
		RANGESEL[1] = RANGE3, output voltage = 250 mV	—	0.03	—	%

Note:

1. In IDAC_CURPROG register.
2. The IDAC is supplied by either AVDD, DVDD, or IOVDD based on the setting of ANASW in the EMU_PWRCTRL register and PWRSEL in the IDAC_CTRL register. Setting PWRSEL to 1 selects IOVDD. With PWRSEL cleared to 0, ANASW selects between AVDD (0) and DVDD (1).

4.1.20 Capacitive Sense (CSEN)

Table 4.46. Capacitive Sense (CSEN)

Parameter	Symbol	Test Condition	Min	Typ	Max	Unit
Single conversion time (1x accumulation)	t_{CNV}	12-bit SAR Conversions	—	20.2	—	µs
		16-bit SAR Conversions	—	26.4	—	µs
		Delta Modulation Conversion (single comparison)	—	1.55	—	µs
Maximum external capacitive load	C_{EXTMAX}	IREFPROG=7 (Gain = 1x), including routing parasitics	—	68	—	pF
		IREFPROG=0 (Gain = 10x), including routing parasitics	—	680	—	pF
Maximum external series impedance	R_{EXTMAX}		—	1	—	kΩ
Supply current, EM2 bonded conversions, WARMUPMODE=NORMAL, WARMUPCNT=0	I_{CSEN_BOND}	12-bit SAR conversions, 20 ms conversion rate, IREFPROG=7 (Gain = 1x), 10 channels bonded (total capacitance of 330 pF)[1]	—	326	—	nA
		Delta Modulation conversions, 20 ms conversion rate, IREFPROG=7 (Gain = 1x), 10 channels bonded (total capacitance of 330 pF)[1]	—	226	—	nA
		12-bit SAR conversions, 200 ms conversion rate, IREFPROG=7 (Gain = 1x), 10 channels bonded (total capacitance of 330 pF)[1]	—	33	—	nA
		Delta Modulation conversions, 200 ms conversion rate, IREFPROG=7 (Gain = 1x), 10 channels bonded (total capacitance of 330 pF)[1]	—	25	—	nA
Supply current, EM2 scan conversions, WARMUPMODE=NORMAL, WARMUPCNT=0	I_{CSEN_EM2}	12-bit SAR conversions, 20 ms scan rate, IREFPROG=0 (Gain = 10x), 8 samples per scan[1]	—	690	—	nA
		Delta Modulation conversions, 20 ms scan rate, 8 comparisons per sample (DMCR = 1, DMR = 2), IREFPROG=0 (Gain = 10x), 8 samples per scan[1]	—	515	—	nA
		12-bit SAR conversions, 200 ms scan rate, IREFPROG=0 (Gain = 10x), 8 samples per scan[1]	—	79	—	nA
		Delta Modulation conversions, 200 ms scan rate, 8 comparisons per sample (DMCR = 1, DMR = 2), IREFPROG=0 (Gain = 10x), 8 samples per scan[1]	—	57	—	nA

Parameter	Symbol	Test Condition	Min	Typ	Max	Unit
Supply current, continuous conversions, WARMUP-MODE=KEEPCSENWARM	I_{CSEN_ACTIVE}	SAR or Delta Modulation conversions of 33 pF capacitor, IREFPROG=0 (Gain = 10x), always on	—	90.5	—	µA
HFPERCLK supply current	$I_{CSEN_HFPERCLK}$	Current contribution from HFPERCLK when clock to CSEN block is enabled.	—	2.25	—	µA/MHz

Note:

1. Current is specified with a total external capacitance of 33 pF per channel. Average current is dependent on how long the peripheral is actively sampling channels within the scan period, and scales with the number of samples acquired. Supply current for a specific application can be estimated by multiplying the current per sample by the total number of samples per period (total_current = single_sample_current * (number_of_channels * accumulation)).

4.1.21 Operational Amplifier (OPAMP)

Unless otherwise indicated, specified conditions are: Non-inverting input configuration, VDD = 3.3 V, DRIVESTRENGTH = 2, MAIN-OUTEN = 1, C_{LOAD} = 75 pF with OUTSCALE = 0, or C_{LOAD} = 37.5 pF with OUTSCALE = 1. Unit gain buffer and 3X-gain connection as specified in table footnotes[1] [2].

Table 4.47. Operational Amplifier (OPAMP)

Parameter	Symbol	Test Condition	Min	Typ	Max	Unit
Supply voltage (from AVDD)	V_{OPA}	HCMDIS = 0, Rail-to-rail input range	2	—	3.8	V
		HCMDIS = 1	1.62	—	3.8	V
Input voltage	V_{IN}	HCMDIS = 0, Rail-to-rail input range	V_{VSS}	—	V_{OPA}	V
		HCMDIS = 1	V_{VSS}	—	V_{OPA}-1.2	V
Input impedance	R_{IN}		100	—	—	MΩ
Output voltage	V_{OUT}		V_{VSS}	—	V_{OPA}	V
Load capacitance[3]	C_{LOAD}	OUTSCALE = 0	—	—	75	pF
		OUTSCALE = 1	—	—	37.5	pF
Output impedance	R_{OUT}	DRIVESTRENGTH = 2 or 3, 0.4 V ≤ V_{OUT} ≤ V_{OPA} - 0.4 V, -8 mA < I_{OUT} < 8 mA, Buffer connection, Full supply range	—	0.25	—	Ω
		DRIVESTRENGTH = 0 or 1, 0.4 V ≤ V_{OUT} ≤ V_{OPA} - 0.4 V, -400 µA < I_{OUT} < 400 µA, Buffer connection, Full supply range	—	0.6	—	Ω
		DRIVESTRENGTH = 2 or 3, 0.1 V ≤ V_{OUT} ≤ V_{OPA} - 0.1 V, -2 mA < I_{OUT} < 2 mA, Buffer connection, Full supply range	—	0.4	—	Ω
		DRIVESTRENGTH = 0 or 1, 0.1 V ≤ V_{OUT} ≤ V_{OPA} - 0.1 V, -100 µA < I_{OUT} < 100 µA, Buffer connection, Full supply range	—	1	—	Ω
Internal closed-loop gain	G_{CL}	Buffer connection	0.99	1	1.01	-
		3x Gain connection	2.93	2.99	3.05	-
		16x Gain connection	15.07	15.7	16.33	-
Active current[4]	I_{OPA}	DRIVESTRENGTH = 3, OUT-SCALE = 0	—	580	—	µA
		DRIVESTRENGTH = 2, OUT-SCALE = 0	—	176	—	µA
		DRIVESTRENGTH = 1, OUT-SCALE = 0	—	13	—	µA
		DRIVESTRENGTH = 0, OUT-SCALE = 0	—	4.7	—	µA

Parameter	Symbol	Test Condition	Min	Typ	Max	Unit
Open-loop gain	G_{OL}	DRIVESTRENGTH = 3	—	135	—	dB
		DRIVESTRENGTH = 2	—	137	—	dB
		DRIVESTRENGTH = 1	—	121	—	dB
		DRIVESTRENGTH = 0	—	109	—	dB
Loop unit-gain frequency[5]	UGF	DRIVESTRENGTH = 3, Buffer connection	—	3.38	—	MHz
		DRIVESTRENGTH = 2, Buffer connection	—	0.9	—	MHz
		DRIVESTRENGTH = 1, Buffer connection	—	132	—	kHz
		DRIVESTRENGTH = 0, Buffer connection	—	34	—	kHz
		DRIVESTRENGTH = 3, 3x Gain connection	—	2.57	—	MHz
		DRIVESTRENGTH = 2, 3x Gain connection	—	0.71	—	MHz
		DRIVESTRENGTH = 1, 3x Gain connection	—	113	—	kHz
		DRIVESTRENGTH = 0, 3x Gain connection	—	28	—	kHz
Phase margin	PM	DRIVESTRENGTH = 3, Buffer connection	—	67	—	°
		DRIVESTRENGTH = 2, Buffer connection	—	69	—	°
		DRIVESTRENGTH = 1, Buffer connection	—	63	—	°
		DRIVESTRENGTH = 0, Buffer connection	—	68	—	°
Output voltage noise	N_{OUT}	DRIVESTRENGTH = 3, Buffer connection, 10 Hz - 10 MHz	—	146	—	µVrms
		DRIVESTRENGTH = 2, Buffer connection, 10 Hz - 10 MHz	—	163	—	µVrms
		DRIVESTRENGTH = 1, Buffer connection, 10 Hz - 1 MHz	—	170	—	µVrms
		DRIVESTRENGTH = 0, Buffer connection, 10 Hz - 1 MHz	—	176	—	µVrms
		DRIVESTRENGTH = 3, 3x Gain connection, 10 Hz - 10 MHz	—	313	—	µVrms
		DRIVESTRENGTH = 2, 3x Gain connection, 10 Hz - 10 MHz	—	271	—	µVrms
		DRIVESTRENGTH = 1, 3x Gain connection, 10 Hz - 1 MHz	—	247	—	µVrms
		DRIVESTRENGTH = 0, 3x Gain connection, 10 Hz - 1 MHz	—	245	—	µVrms

Parameter	Symbol	Test Condition	Min	Typ	Max	Unit
Slew rate[6]	SR	DRIVESTRENGTH = 3, INCBW=1[7]	—	4.7	—	V/µs
		DRIVESTRENGTH = 3, INCBW=0	—	1.5	—	V/µs
		DRIVESTRENGTH = 2, INCBW=1[7]	—	1.27	—	V/µs
		DRIVESTRENGTH = 2, INCBW=0	—	0.42	—	V/µs
		DRIVESTRENGTH = 1, INCBW=1[7]	—	0.17	—	V/µs
		DRIVESTRENGTH = 1, INCBW=0	—	0.058	—	V/µs
		DRIVESTRENGTH = 0, INCBW=1[7]	—	0.044	—	V/µs
		DRIVESTRENGTH = 0, INCBW=0	—	0.015	—	V/µs
Startup time[8]	T_{START}	DRIVESTRENGTH = 2	—	—	12	µs
Input offset voltage	V_{OSI}	DRIVESTRENGTH = 2 or 3, T = 25 °C	-2	—	2	mV
		DRIVESTRENGTH = 1 or 0, T = 25 °C	-2	—	2	mV
		DRIVESTRENGTH = 2 or 3, across operating temperature range	-12	—	12	mV
		DRIVESTRENGTH = 1 or 0, across operating temperature range	-30	—	30	mV
DC power supply rejection ratio[9]	$PSRR_{DC}$	Input referred	—	70	—	dB
DC common-mode rejection ratio[9]	$CMRR_{DC}$	Input referred	—	70	—	dB
Total harmonic distortion	THD_{OPA}	DRIVESTRENGTH = 2, 3x Gain connection, 1 kHz, V_{OUT} = 0.1 V to V_{OPA} - 0.1 V	—	90	—	dB
		DRIVESTRENGTH = 0, 3x Gain connection, 0.1 kHz, V_{OUT} = 0.1 V to V_{OPA} - 0.1 V	—	90	—	dB

Parameter	Symbol	Test Condition	Min	Typ	Max	Unit

Note:

1. Specified configuration for Unit gain buffer configuration is: INCBW = 0, HCMDIS = 0, RESINSEL = DISABLE. V_{INPUT} = 0.5 V, V_{OUTPUT} = 0.5 V.
2. Specified configuration for 3X-Gain configuration is: INCBW = 1, HCMDIS = 1, RESINSEL = VSS, V_{INPUT} = 0.5 V, V_{OUTPUT} = 1.5 V. Nominal voltage gain is 3.
3. If the maximum C_{LOAD} is exceeded, an isolation resistor is required for stability. See AN0038 for more information.
4. Current into the load resistor is excluded. When the OPAMP is connected with closed-loop gain > 1, there will be extra current to drive the resistor feedback network. The internal resistor feedback network has total resistance of 143.5 kOhm, which will cause another ~10 µA current when the OPAMP drives 1.5 V between output and ground.
5. In unit gain connection, UGF is the gain-bandwidth product of the OPAMP. In 3x Gain connection, UGF is the gain-bandwidth product of the OPAMP and 1/3 attenuation of the feedback network.
6. Step between 0.2V and V_{OPA}-0.2V, 10%-90% rising/falling range.
7. When INCBW is set to 1 the OPAMP bandwidth is increased. This is allowed only when the non-inverting close-loop gain is ≥ 3, or the OPAMP may not be stable.
8. From enable to output settled. In sample-and-off mode, RC network after OPAMP will contribute extra delay. Settling error < 1mV.
9. When HCMDIS=1 and input common mode transitions the region from V_{OPA}-1.4V to V_{OPA}-1V, input offset will change. PSRR and CMRR specifications do not apply to this transition region.

4.1.22 Pulse Counter (PCNT)

Table 4.48. Pulse Counter (PCNT)

Parameter	Symbol	Test Condition	Min	Typ	Max	Unit
Input frequency	F_{IN}	Asynchronous Single and Quadrature Modes	—	—	20	MHz
		Sampled Modes with Debounce filter set to 0.	—	—	8	kHz

4.1.23 Analog Port (APORT)

Table 4.49. Analog Port (APORT)

Parameter	Symbol	Test Condition	Min	Typ	Max	Unit
Supply current[1] [2]	I_{APORT}	Operation in EM0/EM1	—	7	—	µA
		Operation in EM2/EM3	—	67	—	nA

Note:

1. Supply current increase that occurs when an analog peripheral requests access to APORT. This current is not included in reported peripheral currents. Additional peripherals requesting access to APORT do not incur further current.
2. Specified current is for continuous APORT operation. In applications where the APORT is not requested continuously (e.g. periodic ACMP requests from LESENSE in EM2), the average current requirements can be estimated by mutiplying the duty cycle of the requests by the specified continuous current number.

4.1.24 I2C

4.1.24.1 I2C Standard-mode (Sm)[1]

Table 4.50. I2C Standard-mode (Sm)[1]

Parameter	Symbol	Test Condition	Min	Typ	Max	Unit
SCL clock frequency[2]	f_{SCL}		0	—	100	kHz
SCL clock low time	t_{LOW}		4.7	—	—	µs
SCL clock high time	t_{HIGH}		4	—	—	µs
SDA set-up time	t_{SU_DAT}		250	—	—	ns
SDA hold time[3]	t_{HD_DAT}		100	—	3450	ns
Repeated START condition set-up time	t_{SU_STA}		4.7	—	—	µs
(Repeated) START condition hold time	t_{HD_STA}		4	—	—	µs
STOP condition set-up time	t_{SU_STO}		4	—	—	µs
Bus free time between a STOP and START condition	t_{BUF}		4.7	—	—	µs

Note:

1. For CLHR set to 0 in the I2Cn_CTRL register.
2. For the minimum HFPERCLK frequency required in Standard-mode, refer to the I2C chapter in the reference manual.
3. The maximum SDA hold time (t_{HD_DAT}) needs to be met only when the device does not stretch the low time of SCL (t_{LOW}).

4.1.24.2 I2C Fast-mode (Fm)[1]

Table 4.51. I2C Fast-mode (Fm)[1]

Parameter	Symbol	Test Condition	Min	Typ	Max	Unit
SCL clock frequency[2]	f_{SCL}		0	—	400	kHz
SCL clock low time	t_{LOW}		1.3	—	—	µs
SCL clock high time	t_{HIGH}		0.6	—	—	µs
SDA set-up time	t_{SU_DAT}		100	—	—	ns
SDA hold time[3]	t_{HD_DAT}		100	—	900	ns
Repeated START condition set-up time	t_{SU_STA}		0.6	—	—	µs
(Repeated) START condition hold time	t_{HD_STA}		0.6	—	—	µs
STOP condition set-up time	t_{SU_STO}		0.6	—	—	µs
Bus free time between a STOP and START condition	t_{BUF}		1.3	—	—	µs

Note:

1. For CLHR set to 1 in the I2Cn_CTRL register.
2. For the minimum HFPERCLK frequency required in Fast-mode, refer to the I2C chapter in the reference manual.
3. The maximum SDA hold time ($t_{HD,DAT}$) needs to be met only when the device does not stretch the low time of SCL (t_{LOW}).

4.1.24.3 I2C Fast-mode Plus (Fm+)[1]

Table 4.52. I2C Fast-mode Plus (Fm+)[1]

Parameter	Symbol	Test Condition	Min	Typ	Max	Unit
SCL clock frequency[2]	f_{SCL}		0	—	1000	kHz
SCL clock low time	t_{LOW}		0.5	—	—	µs
SCL clock high time	t_{HIGH}		0.26	—	—	µs
SDA set-up time	t_{SU_DAT}		50	—	—	ns
SDA hold time	t_{HD_DAT}		100	—	—	ns
Repeated START condition set-up time	t_{SU_STA}		0.26	—	—	µs
(Repeated) START condition hold time	t_{HD_STA}		0.26	—	—	µs
STOP condition set-up time	t_{SU_STO}		0.26	—	—	µs
Bus free time between a STOP and START condition	t_{BUF}		0.5	—	—	µs

Note:

1. For CLHR set to 0 or 1 in the I2Cn_CTRL register.
2. For the minimum HFPERCLK frequency required in Fast-mode Plus, refer to the I2C chapter in the reference manual.

4.1.25 USART SPI

SPI Master Timing

Table 4.53. SPI Master Timing

Parameter	Symbol	Test Condition	Min	Typ	Max	Unit
SCLK period [1 2 3]	t_{SCLK}		2 * $t_{HFPERCLK}$	—	—	ns
CS to MOSI [1 2]	t_{CS_MO}		-14.5	—	13.5	ns
SCLK to MOSI [1 2]	t_{SCLK_MO}		-8.5	—	8	ns
MISO setup time [1 2]	t_{SU_MI}	IOVDD = 1.62 V	92	—	—	ns
		IOVDD = 3.0 V	42	—	—	ns
MISO hold time [1 2]	t_{H_MI}		-10	—	—	ns

Note:
1. Applies for both CLKPHA = 0 and CLKPHA = 1 (figure only shows CLKPHA = 0).
2. Measurement done with 8 pF output loading at 10% and 90% of V_{DD} (figure shows 50% of V_{DD}).
3. $t_{HFPERCLK}$ is one period of the selected HFPERCLK.

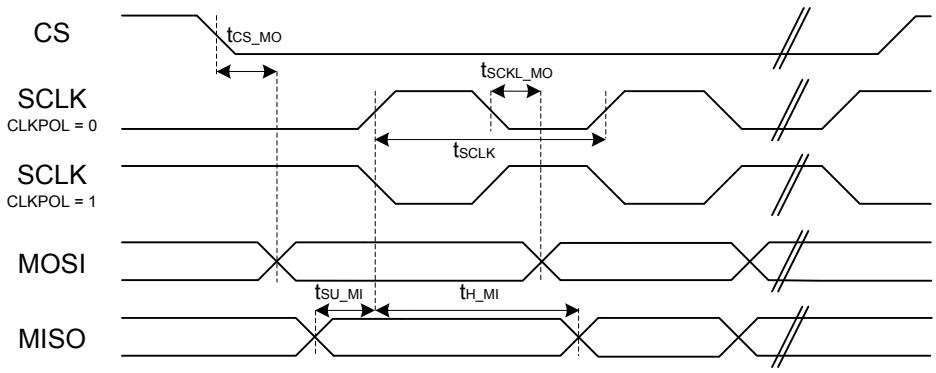

Figure 4.1. SPI Master Timing Diagram

SPI Slave Timing

Table 4.54. SPI Slave Timing

Parameter	Symbol	Test Condition	Min	Typ	Max	Unit
SCLK period [1 2 3]	t_{SCLK}		6 * $t_{HFPERCLK}$	—	—	ns
SCLK high time[1 2 3]	t_{SCLK_HI}		2.5 * $t_{HFPERCLK}$	—	—	ns
SCLK low time[1 2 3]	t_{SCLK_LO}		2.5 * $t_{HFPERCLK}$	—	—	ns
CS active to MISO [1 2]	$t_{CS_ACT_MI}$		4	—	70	ns
CS disable to MISO [1 2]	$t_{CS_DIS_MI}$		4	—	50	ns
MOSI setup time [1 2]	t_{SU_MO}		8	—	—	ns
MOSI hold time [1 2 3]	t_{H_MO}		7	—	—	ns
SCLK to MISO [1 2 3]	t_{SCLK_MI}		10 + 1.5 * $t_{HFPERCLK}$	—	65 + 2.5 * $t_{HFPERCLK}$	ns

Note:
1. Applies for both CLKPHA = 0 and CLKPHA = 1 (figure only shows CLKPHA = 0).
2. Measurement done with 8 pF output loading at 10% and 90% of V_{DD} (figure shows 50% of V_{DD}).
3. $t_{HFPERCLK}$ is one period of the selected HFPERCLK.

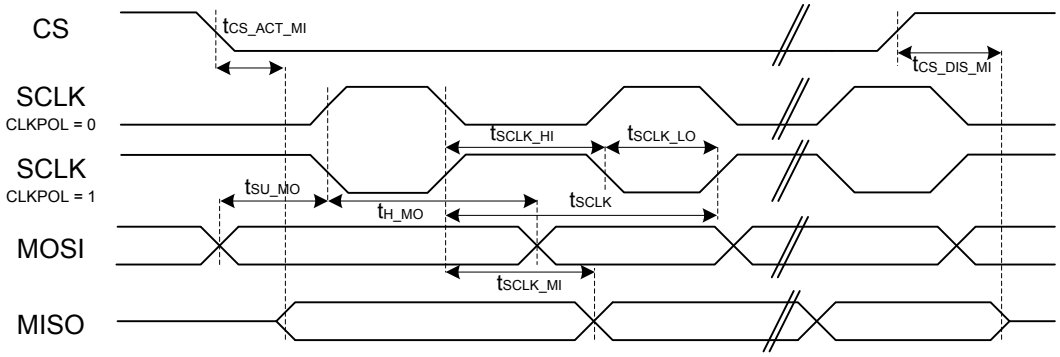

Figure 4.2. SPI Slave Timing Diagram

4.2 Typical Performance Curves

Typical performance curves indicate typical characterized performance under the stated conditions.

4.2.1 Supply Current

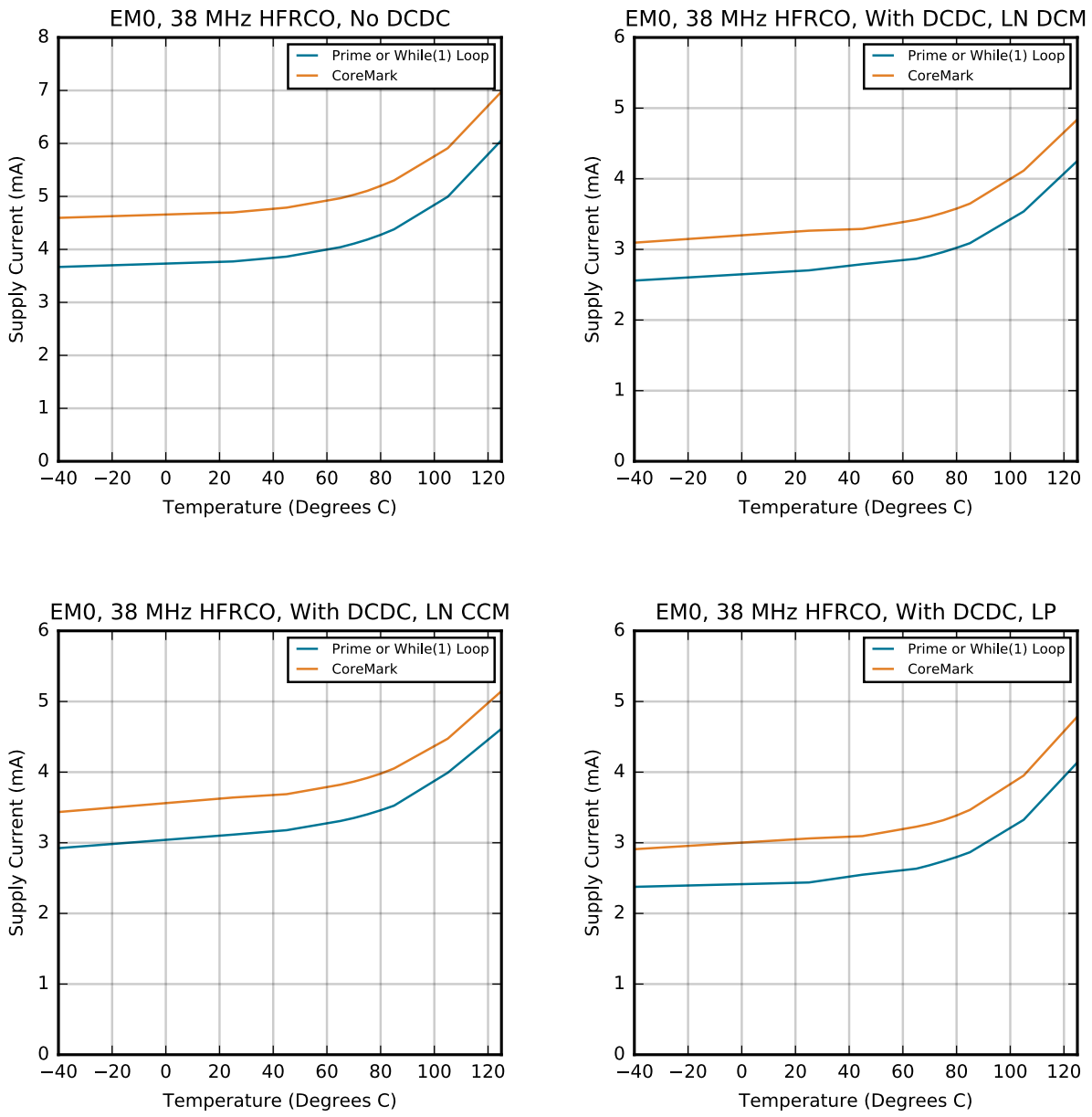

Figure 4.3. EM0 Active Mode Typical Supply Current vs. Temperature

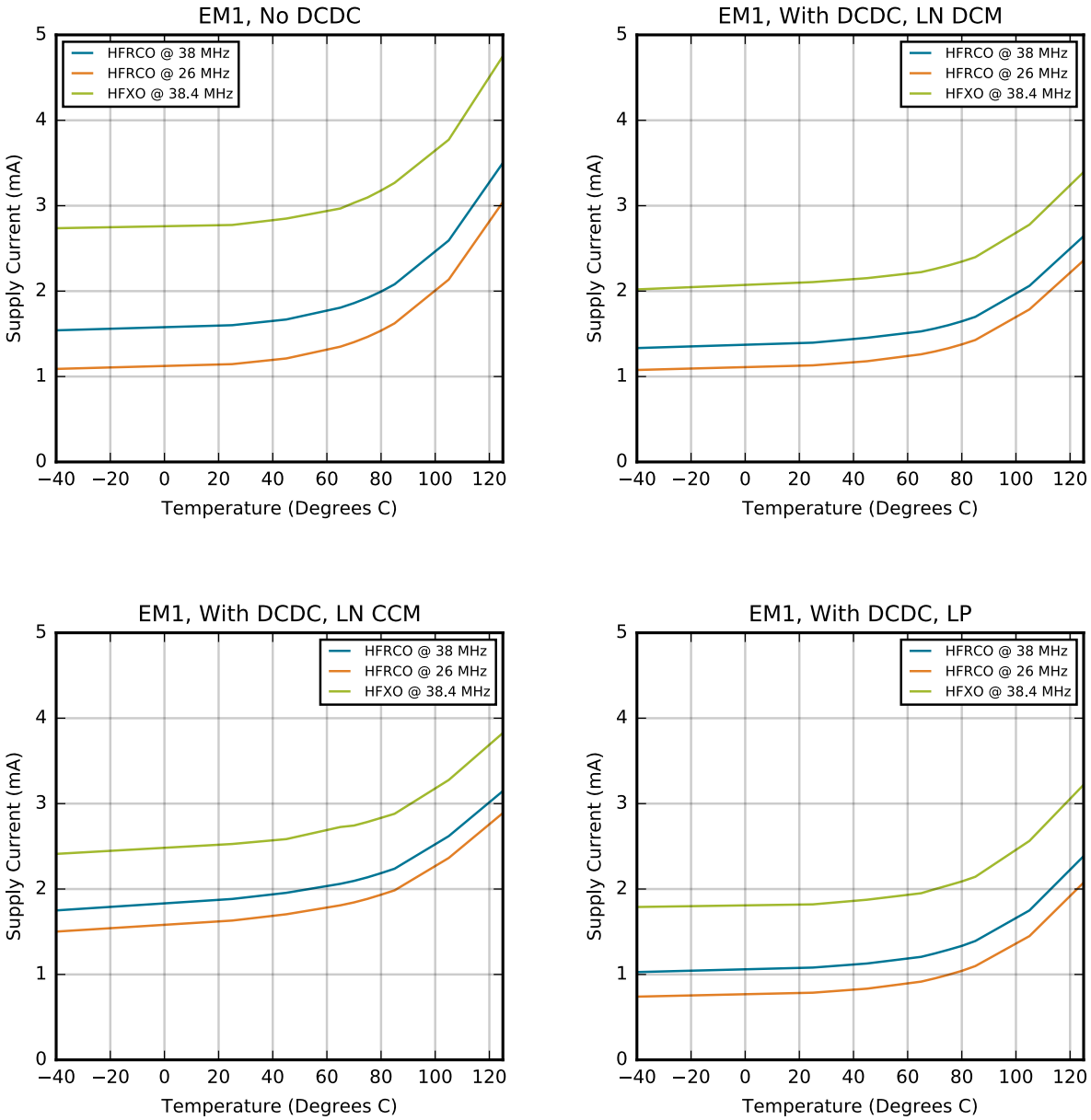

Figure 4.4. EM1 Sleep Mode Typical Supply Current vs. Temperature

Typical supply current for EM2, EM3 and EM4H using standard software libraries from Silicon Laboratories.

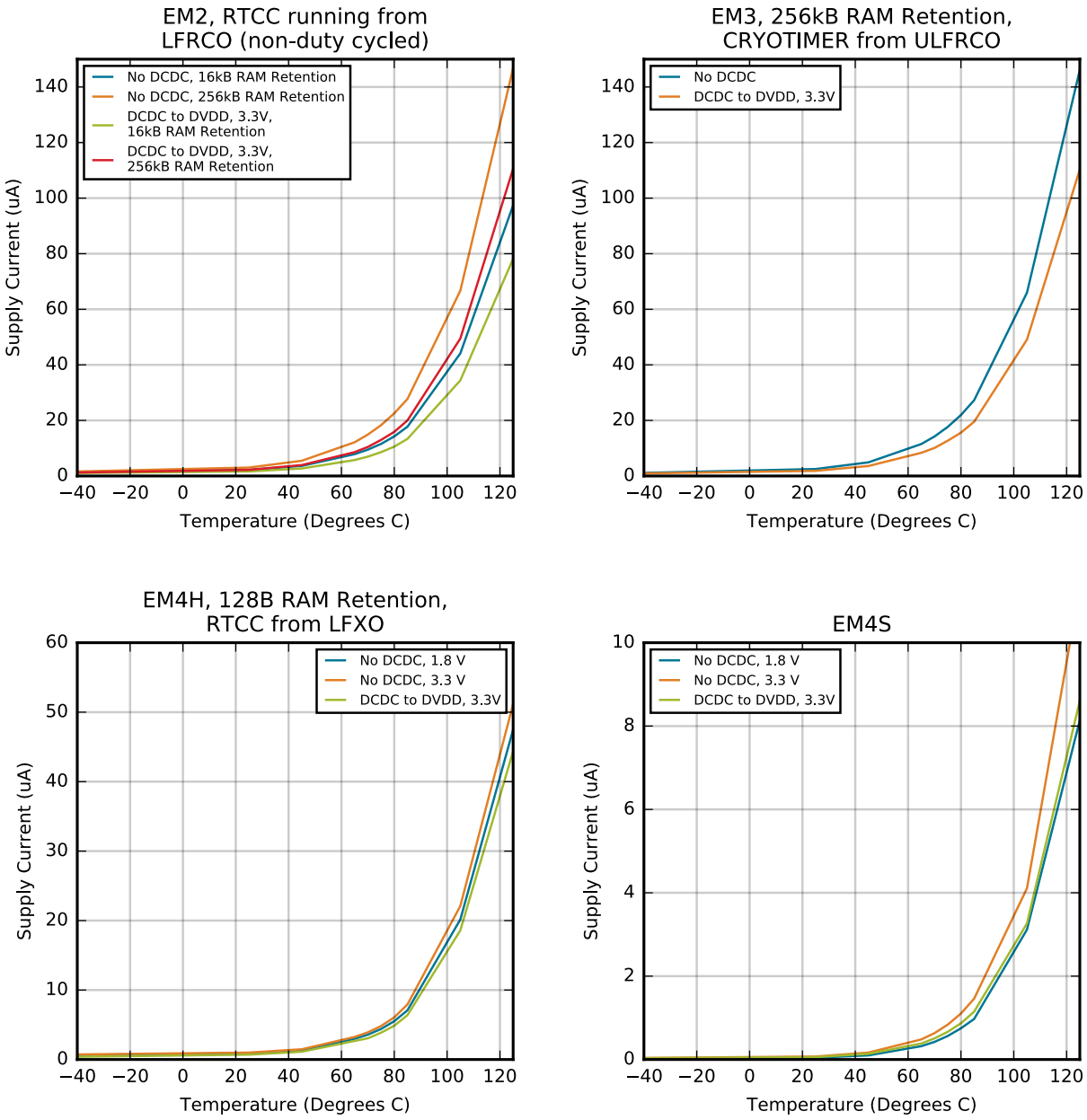

Figure 4.5. EM2, EM3, EM4H and EM4S Typical Supply Current vs. Temperature

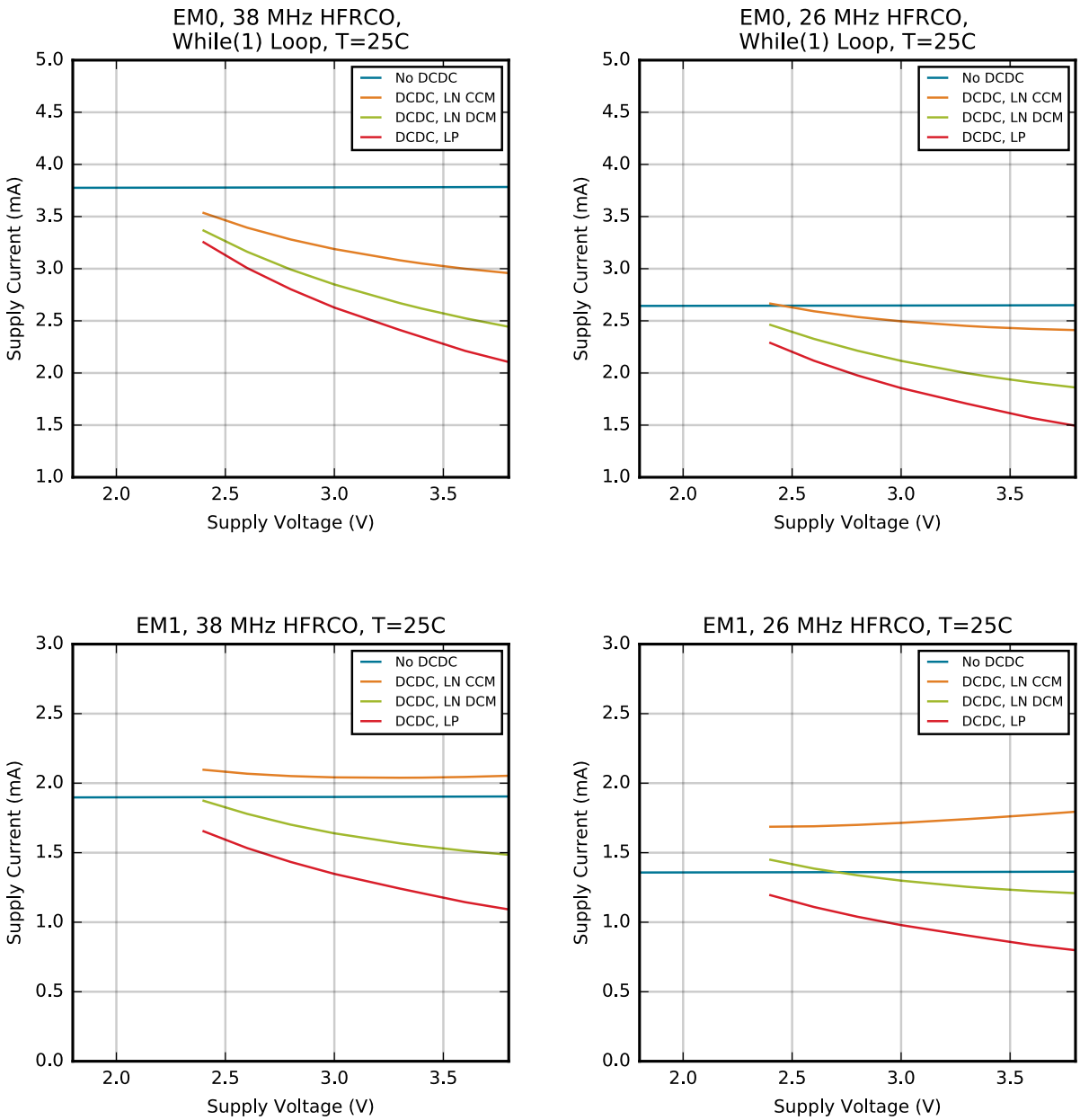

Figure 4.6. EM0 and EM1 Mode Typical Supply Current vs. Supply

Typical supply current for EM2, EM3 and EM4H using standard software libraries from Silicon Laboratories.

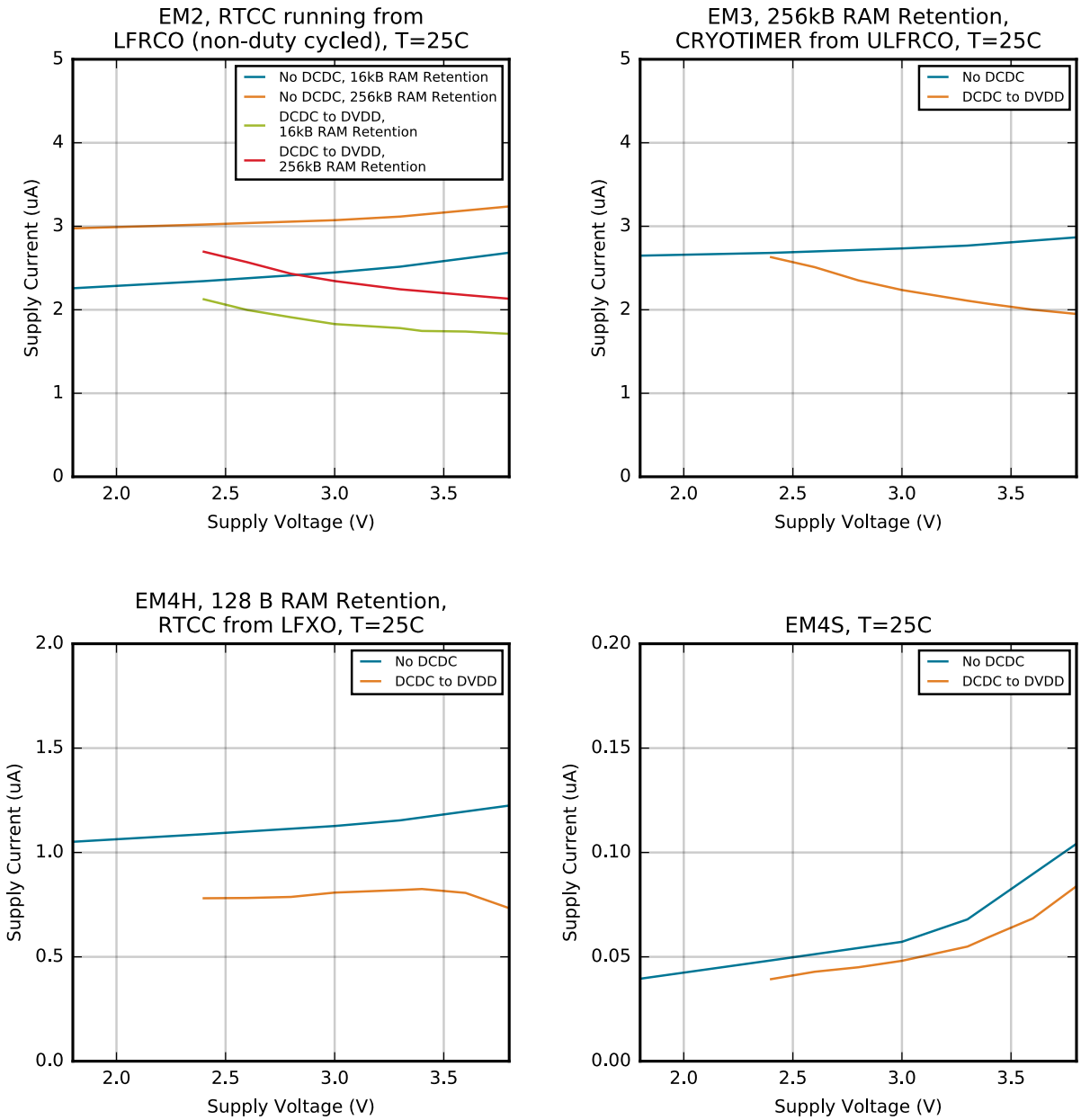

Figure 4.7. EM2, EM3, EM4H and EM4S Typical Supply Current vs. Supply

4.2.2 DC-DC Converter

Default test conditions: CCM mode, LDCDC = 4.7 µH, CDCDC = 4.7 µF, VDCDC_I = 3.3 V, VDCDC_O = 1.8 V, FDCDC_LN = 7 MHz

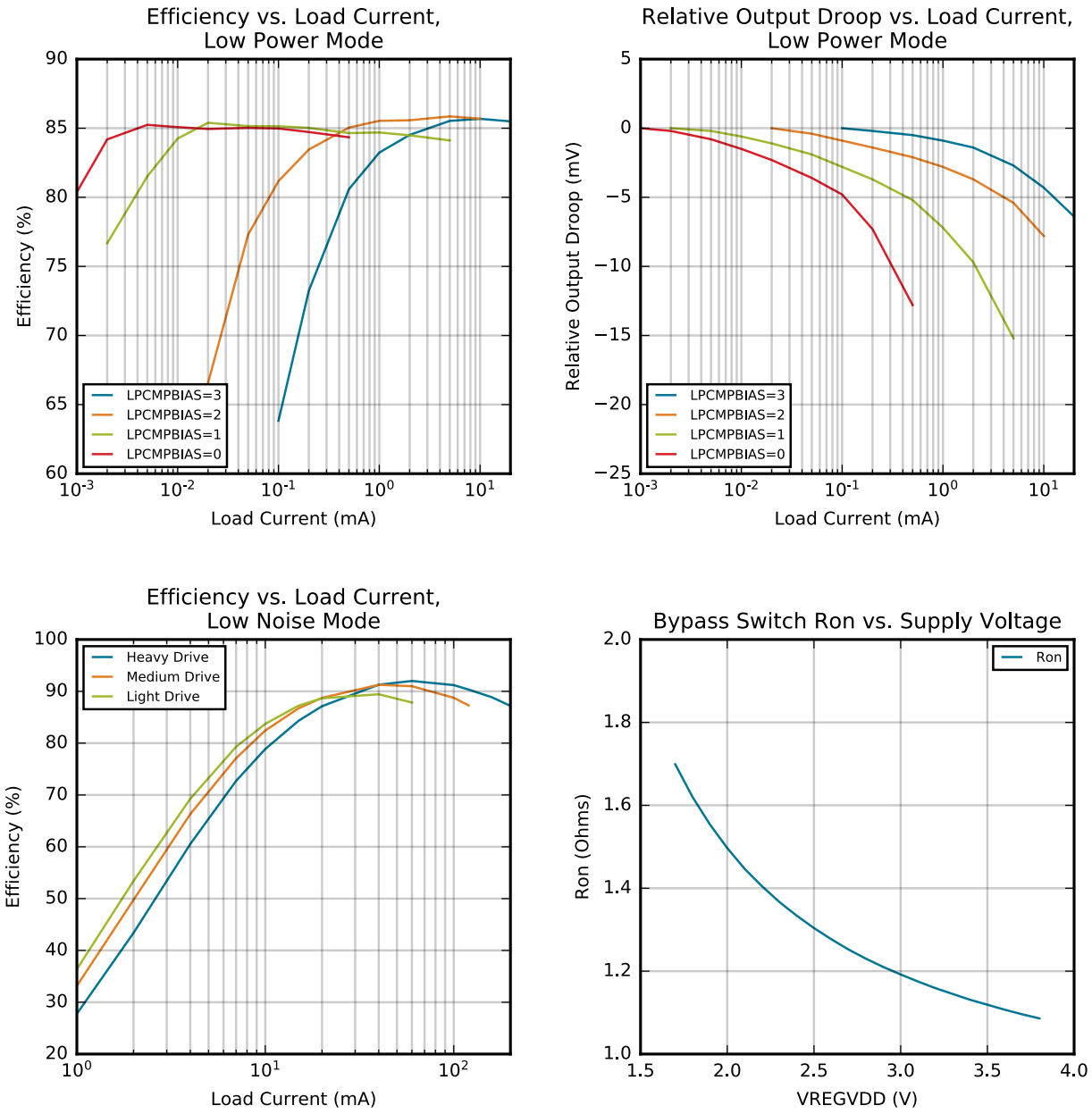

Figure 4.8. DC-DC Converter Typical Performance Characteristics

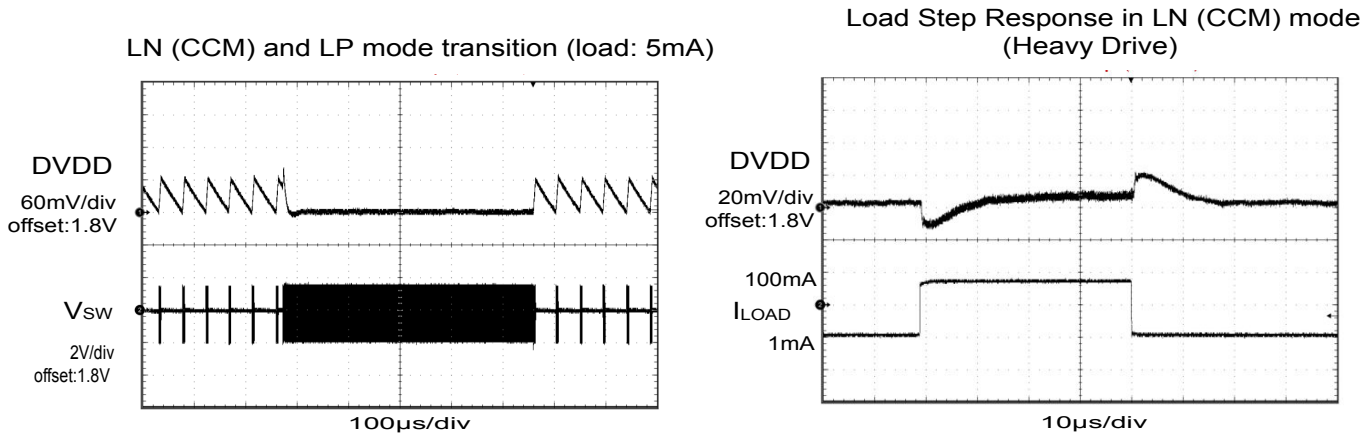

Figure 4.9. DC-DC Converter Transition Waveforms

4.2.3 2.4 GHz Radio

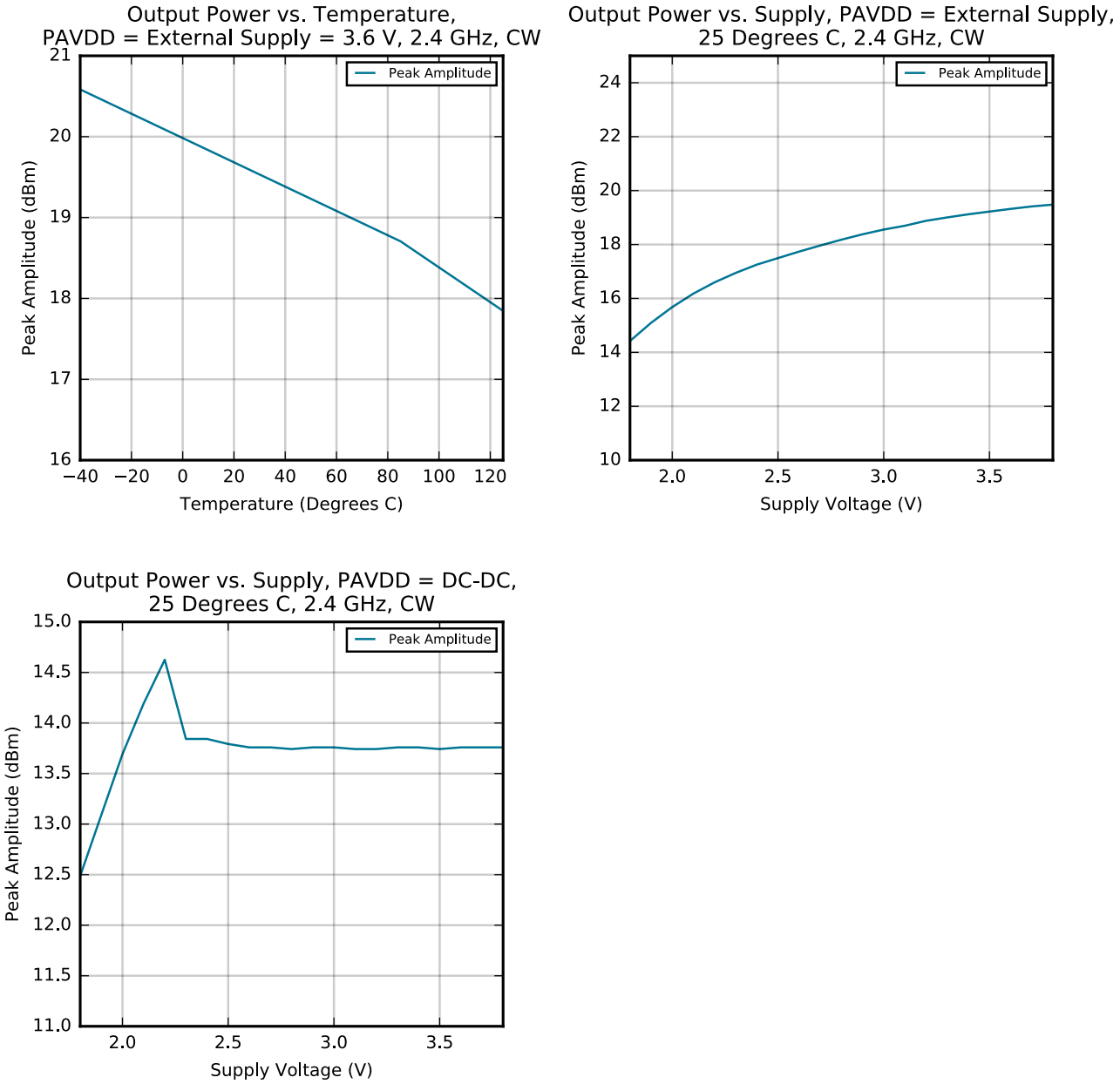

Figure 4.10. 2.4 GHz RF Transmitter Output Power

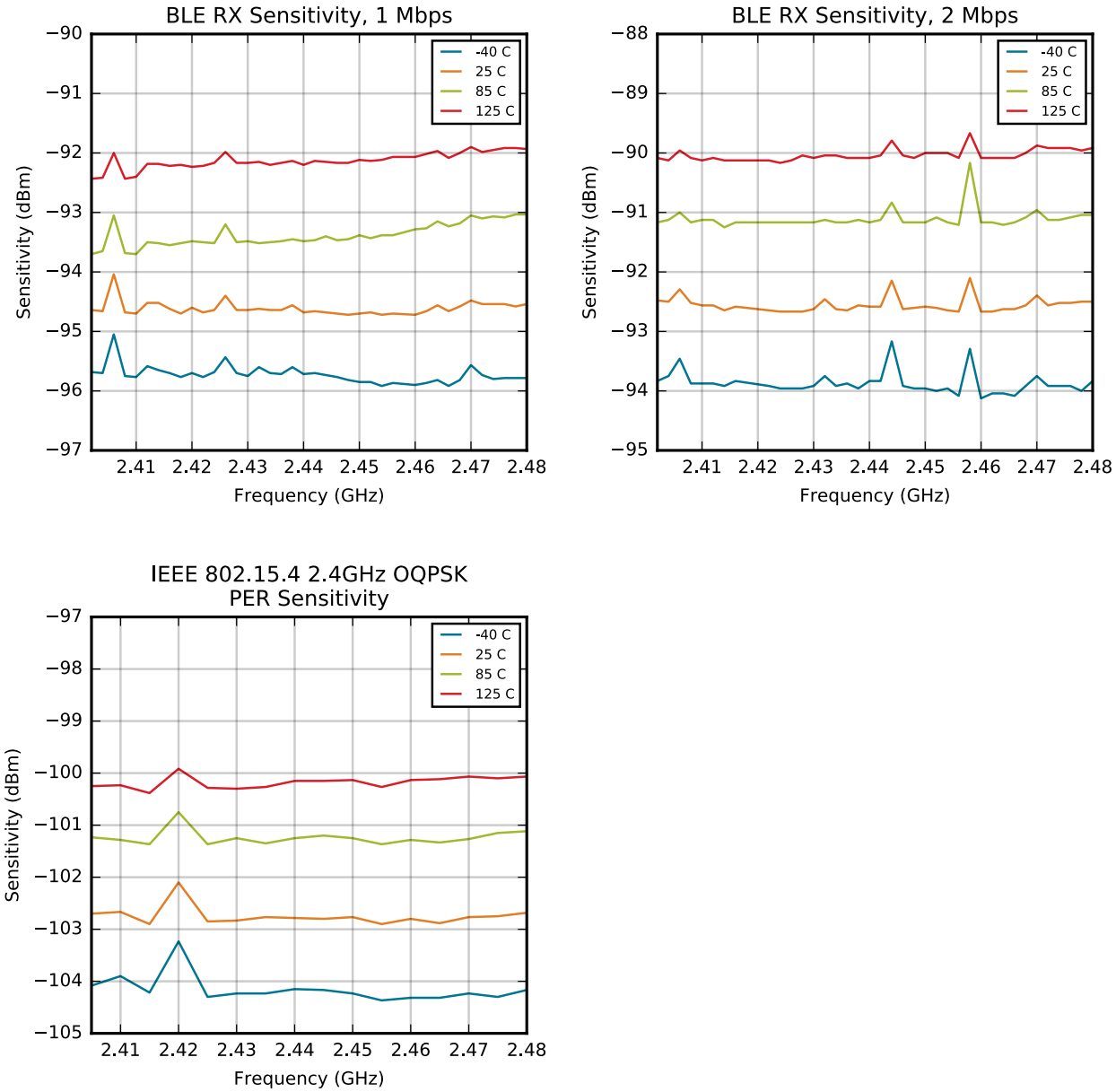

Figure 4.11. 2.4 GHz RF Receiver Sensitivity

5. Typical Connection Diagrams

5.1 Power

Typical power supply connections for direct supply, without using the internal DC-DC converter, are shown in the following figure.

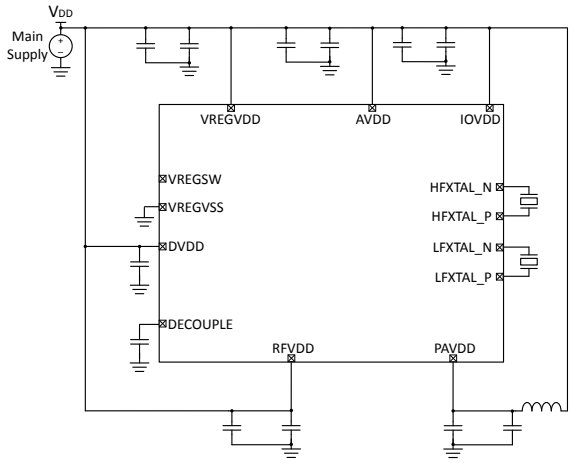

Figure 5.1. EFR32FG12 Typical Application Circuit: Direct Supply Configuration without DC-DC converter

Typical power supply circuits using the internal DC-DC converter are shown below. The MCU operates from the DC-DC converter supply. For low RF transmit power applications less than 13dBm, the RF PA may be supplied by the DC-DC converter. For OPNs supporting high power RF transmission, the RF PA must be directly supplied by VDD for RF transmit power greater than 13 dBm.

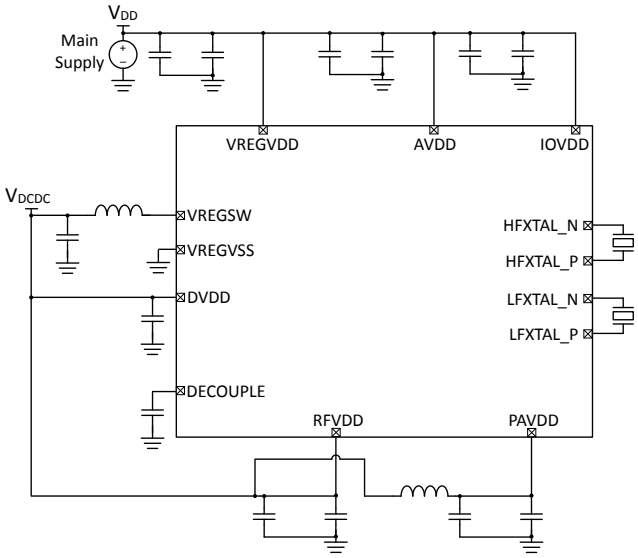

Figure 5.2. EFR32FG12 Typical Application Circuit: Configuration with DC-DC converter (PAVDD from VDCDC)

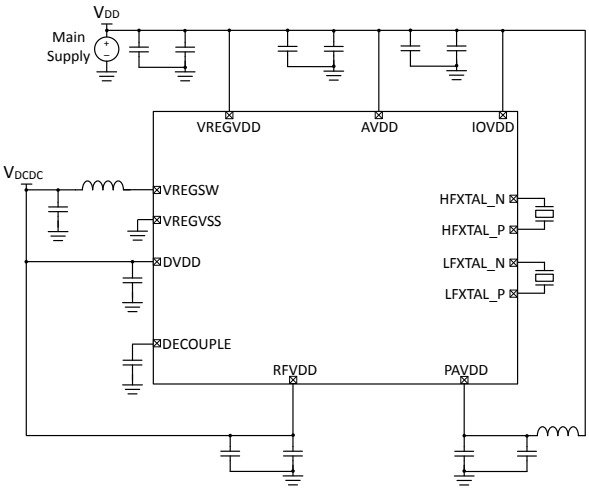

Figure 5.3. EFR32FG12 Typical Application Circuit: Configuration with DC-DC converter (PAVDD from VDD)

5.2 RF Matching Networks

Typical RF matching network circuit diagrams are shown in Figure 5.4 Typical 2.4 GHz RF impedance-matching network circuits on page 118 for applications in the 2.4GHz band, and in Figure 5.5 Typical Sub-GHz RF impedance-matching network circuits on page 118 for applications in the sub-GHz band. Application-specific component values can be found in application notes *AN923: EFR32 sub-GHz Matching Guide* and *AN930: EFR32 2.4 GHz Matching Guide*. For low RF transmit power applications less than 13dBm, the two-element match is recommended. For OPNs supporting high power RF transmission, the four-element match is recommended for high RF transmit power (> 13dBm).

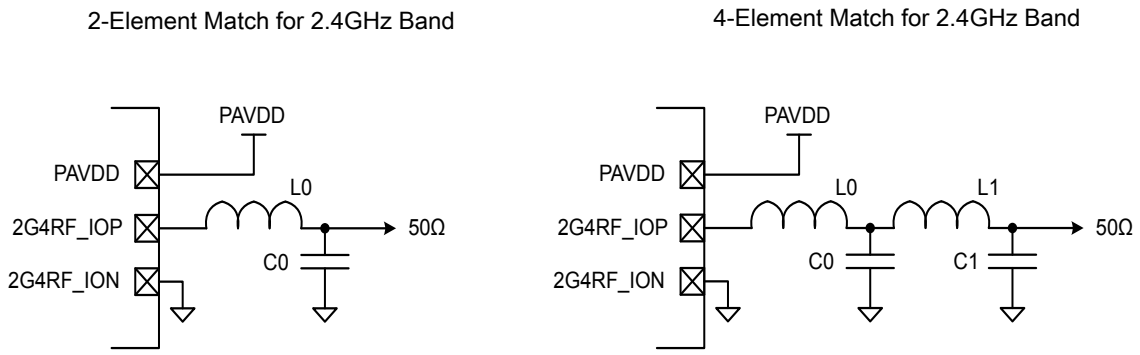

Figure 5.4. Typical 2.4 GHz RF impedance-matching network circuits

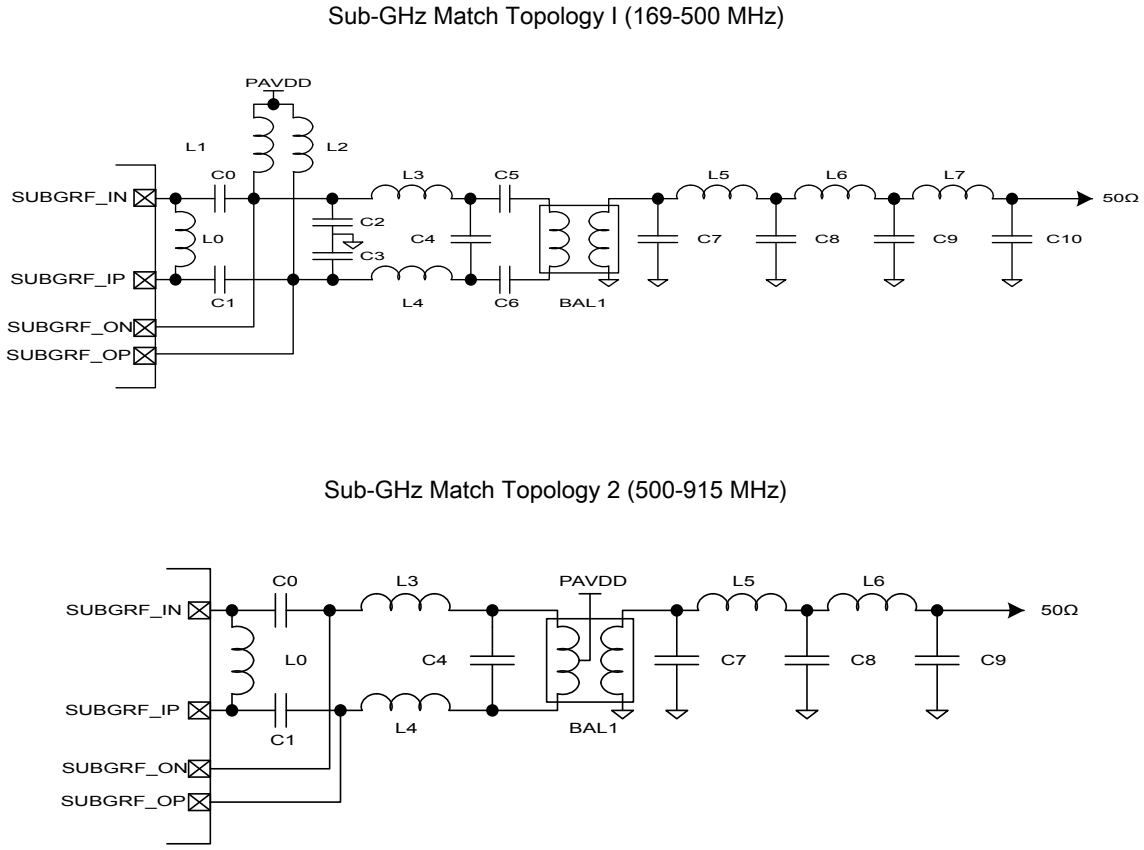

Figure 5.5. Typical Sub-GHz RF impedance-matching network circuits

5.3 Other Connections

Other components or connections may be required to meet the system-level requirements. Application Note AN0002: "Hardware Design Considerations" contains detailed information on these connections. Application Notes can be accessed on the Silicon Labs website (www.silabs.com/32bit-appnotes).

6. Pin Definitions

6.1 BGA125 2.4 GHz and Sub-GHz Device Pinout

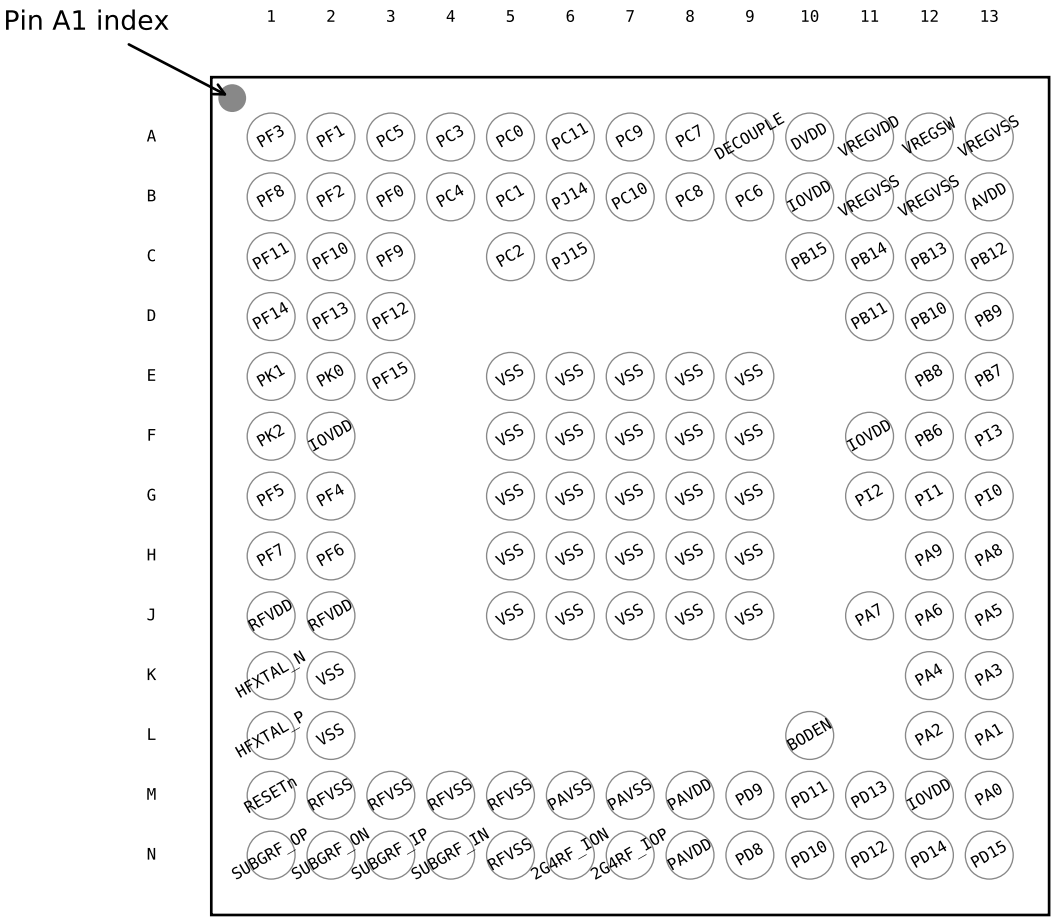

Figure 6.1. BGA125 2.4 GHz and Sub-GHz Device Pinout

The following table provides package pin connections and general descriptions of pin functionality. For detailed information on the supported features for each GPIO pin, see 6.9 GPIO Functionality Table or 6.10 Alternate Functionality Overview.

Table 6.1. BGA125 2.4 GHz and Sub-GHz Device Pinout

Pin Name	Pin(s)	Description	Pin Name	Pin(s)	Description
PF3	A1	GPIO (5V)	PF1	A2	GPIO (5V)
PC5	A3	GPIO (5V)	PC3	A4	GPIO (5V)
PC0	A5	GPIO (5V)	PC11	A6	GPIO (5V)
PC9	A7	GPIO (5V)	PC7	A8	GPIO (5V)

Pin Name	Pin(s)	Description	Pin Name	Pin(s)	Description
DECOUPLE	A9	Decouple output for on-chip voltage regulator. An external decoupling capacitor is required at this pin. This pin should not be used to power any external circuits.	DVDD	A10	Digital power supply.
VREGVDD	A11	Voltage regulator VDD input	VREGSW	A12	DCDC regulator switching node
VREGVSS	A13 B11 B12	Voltage regulator VSS	PF8	B1	GPIO (5V)
PF2	B2	GPIO (5V)	PF0	B3	GPIO (5V)
PC4	B4	GPIO (5V)	PC1	B5	GPIO (5V)
PJ14	B6	GPIO (5V)	PC10	B7	GPIO (5V)
PC8	B8	GPIO (5V)	PC6	B9	GPIO (5V)
IOVDD	B10 F2 F11 M12	Digital IO power supply.	AVDD	B13	Analog power supply.
PF11	C1	GPIO (5V)	PF10	C2	GPIO (5V)
PF9	C3	GPIO (5V)	PC2	C5	GPIO (5V)
PJ15	C6	GPIO (5V)	PB15	C10	GPIO
PB14	C11	GPIO	PB13	C12	GPIO
PB12	C13	GPIO	PF14	D1	GPIO (5V)
PF13	D2	GPIO (5V)	PF12	D3	GPIO (5V)
PB11	D11	GPIO	PB10	D12	GPIO (5V)
PB9	D13	GPIO (5V)	PK1	E1	GPIO (5V)
PK0	E2	GPIO	PF15	E3	GPIO (5V)

Pin Name	Pin(s)	Description	Pin Name	Pin(s)	Description
VSS	E5 E6 E7 E8 E9 F5 F6 F7 F8 F9 G5 G6 G7 G8 G9 H5 H6 H7 H8 H9 J5 J6 J7 J8 J9 K2 L2	Ground	PB8	E12	GPIO (5V)
PB7	E13	GPIO (5V)	PK2	F1	GPIO (5V)
PB6	F12	GPIO (5V)	PI3	F13	GPIO (5V)
PF5	G1	GPIO (5V)	PF4	G2	GPIO (5V)
PI2	G11	GPIO (5V)	PI1	G12	GPIO (5V)
PI0	G13	GPIO (5V)	PF7	H1	GPIO (5V)
PF6	H2	GPIO (5V)	PA9	H12	GPIO (5V)
PA8	H13	GPIO (5V)	RFVDD	J1 J2	Radio power supply
PA7	J11	GPIO (5V)	PA6	J12	GPIO (5V)
PA5	J13	GPIO (5V)	HFXTAL_N	K1	High Frequency Crystal input pin.
PA4	K12	GPIO	PA3	K13	GPIO
HFXTAL_P	L1	High Frequency Crystal output pin.	BODEN	L10	Brown-Out Detector Enable. This pin may be left disconnected or tied to AVDD.
PA2	L12	GPIO	PA1	L13	GPIO
RESETn	M1	Reset input, active low. This pin is internally pulled up to AVDD. To apply an external reset source to this pin, it is required to only drive this pin low during reset, and let the internal pull-up ensure that reset is released.	RFVSS	M2 M3 M4 M5 N5	Radio Ground
PAVSS	M6 M7	Power Amplifier (PA) voltage regulator VSS	PAVDD	M8 N8	Power Amplifier (PA) voltage regulator VDD input
PD9	M9	GPIO (5V)	PD11	M10	GPIO (5V)
PD13	M11	GPIO	PA0	M13	GPIO

Pin Name	Pin(s)	Description	Pin Name	Pin(s)	Description
SUBGRF_OP	N1	Sub GHz Differential RF output, positive path.	SUBGRF_ON	N2	Sub GHz Differential RF output, negative path.
SUBGRF_IP	N3	Sub GHz Differential RF input, positive path.	SUBGRF_IN	N4	Sub GHz Differential RF input, negative path.
2G4RF_ION	N6	2.4 GHz Differential RF input/output, negative path. This pin should be externally grounded.	2G4RF_IOP	N7	2.4 GHz Differential RF input/output, positive path.
PD8	N9	GPIO (5V)	PD10	N10	GPIO (5V)
PD12	N11	GPIO (5V)	PD14	N12	GPIO
PD15	N13	GPIO			

Note:

1. GPIO with 5V tolerance are indicated by (5V).

6.2 BGA125 2.4 GHz Device Pinout

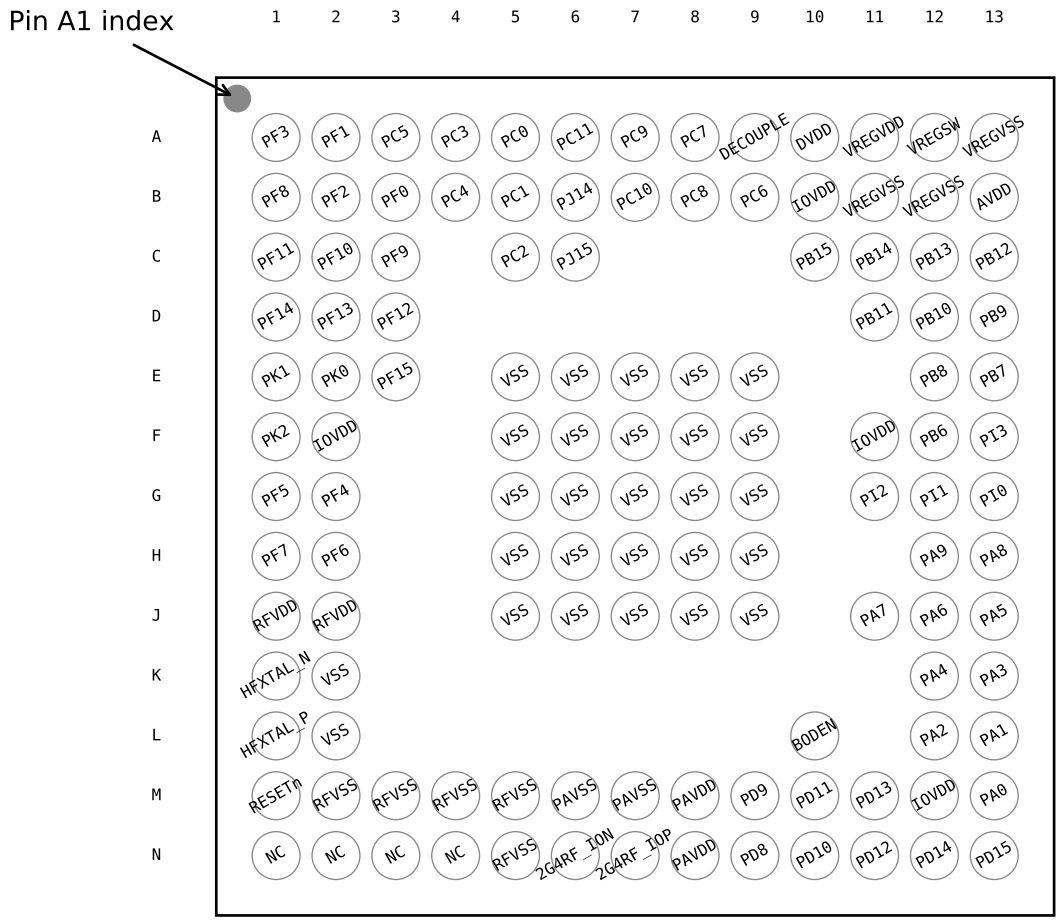

Figure 6.2. BGA125 2.4 GHz Device Pinout

The following table provides package pin connections and general descriptions of pin functionality. For detailed information on the supported features for each GPIO pin, see 6.9 GPIO Functionality Table or 6.10 Alternate Functionality Overview.

Table 6.2. BGA125 2.4 GHz Device Pinout

Pin Name	Pin(s)	Description	Pin Name	Pin(s)	Description
PF3	A1	GPIO (5V)	PF1	A2	GPIO (5V)
PC5	A3	GPIO (5V)	PC3	A4	GPIO (5V)
PC0	A5	GPIO (5V)	PC11	A6	GPIO (5V)
PC9	A7	GPIO (5V)	PC7	A8	GPIO (5V)
DECOUPLE	A9	Decouple output for on-chip voltage regulator. An external decoupling capacitor is required at this pin. This pin should not be used to power any external circuits.	DVDD	A10	Digital power supply.

Pin Name	Pin(s)	Description	Pin Name	Pin(s)	Description
VREGVDD	A11	Voltage regulator VDD input	VREGSW	A12	DCDC regulator switching node
VREGVSS	A13 B11 B12	Voltage regulator VSS	PF8	B1	GPIO (5V)
PF2	B2	GPIO (5V)	PF0	B3	GPIO (5V)
PC4	B4	GPIO (5V)	PC1	B5	GPIO (5V)
PJ14	B6	GPIO (5V)	PC10	B7	GPIO (5V)
PC8	B8	GPIO (5V)	PC6	B9	GPIO (5V)
IOVDD	B10 F2 F11 M12	Digital IO power supply.	AVDD	B13	Analog power supply.
PF11	C1	GPIO (5V)	PF10	C2	GPIO (5V)
PF9	C3	GPIO (5V)	PC2	C5	GPIO (5V)
PJ15	C6	GPIO (5V)	PB15	C10	GPIO
PB14	C11	GPIO	PB13	C12	GPIO
PB12	C13	GPIO	PF14	D1	GPIO (5V)
PF13	D2	GPIO (5V)	PF12	D3	GPIO (5V)
PB11	D11	GPIO	PB10	D12	GPIO (5V)
PB9	D13	GPIO (5V)	PK1	E1	GPIO (5V)
PK0	E2	GPIO	PF15	E3	GPIO (5V)
VSS	E5 E6 E7 E8 E9 F5 F6 F7 F8 F9 G5 G6 G7 G8 G9 H5 H6 H7 H8 H9 J5 J6 J7 J8 J9 K2 L2	Ground	PB8	E12	GPIO (5V)
PB7	E13	GPIO (5V)	PK2	F1	GPIO (5V)
PB6	F12	GPIO (5V)	PI3	F13	GPIO (5V)

Pin Name	Pin(s)	Description	Pin Name	Pin(s)	Description
PF5	G1	GPIO (5V)	PF4	G2	GPIO (5V)
PI2	G11	GPIO (5V)	PI1	G12	GPIO (5V)
PI0	G13	GPIO (5V)	PF7	H1	GPIO (5V)
PF6	H2	GPIO (5V)	PA9	H12	GPIO (5V)
PA8	H13	GPIO (5V)	RFVDD	J1 J2	Radio power supply
PA7	J11	GPIO (5V)	PA6	J12	GPIO (5V)
PA5	J13	GPIO (5V)	HFXTAL_N	K1	High Frequency Crystal input pin.
PA4	K12	GPIO	PA3	K13	GPIO
HFXTAL_P	L1	High Frequency Crystal output pin.	BODEN	L10	Brown-Out Detector Enable. This pin may be left disconnected or tied to AVDD.
PA2	L12	GPIO	PA1	L13	GPIO
RESETn	M1	Reset input, active low. This pin is internally pulled up to AVDD. To apply an external reset source to this pin, it is required to only drive this pin low during reset, and let the internal pull-up ensure that reset is released.	RFVSS	M2 M3 M4 M5 N5	Radio Ground
PAVSS	M6 M7	Power Amplifier (PA) voltage regulator VSS	PAVDD	M8 N8	Power Amplifier (PA) voltage regulator VDD input
PD9	M9	GPIO (5V)	PD11	M10	GPIO (5V)
PD13	M11	GPIO	PA0	M13	GPIO
NC	N1 N2 N3 N4	No Connect.	2G4RF_ION	N6	2.4 GHz Differential RF input/output, negative path. This pin should be externally grounded.
2G4RF_IOP	N7	2.4 GHz Differential RF input/output, positive path.	PD8	N9	GPIO (5V)
PD10	N10	GPIO (5V)	PD12	N11	GPIO (5V)
PD14	N12	GPIO	PD15	N13	GPIO

Note:

1. GPIO with 5V tolerance are indicated by (5V).

6.3 BGA125 Sub-GHz Device Pinout

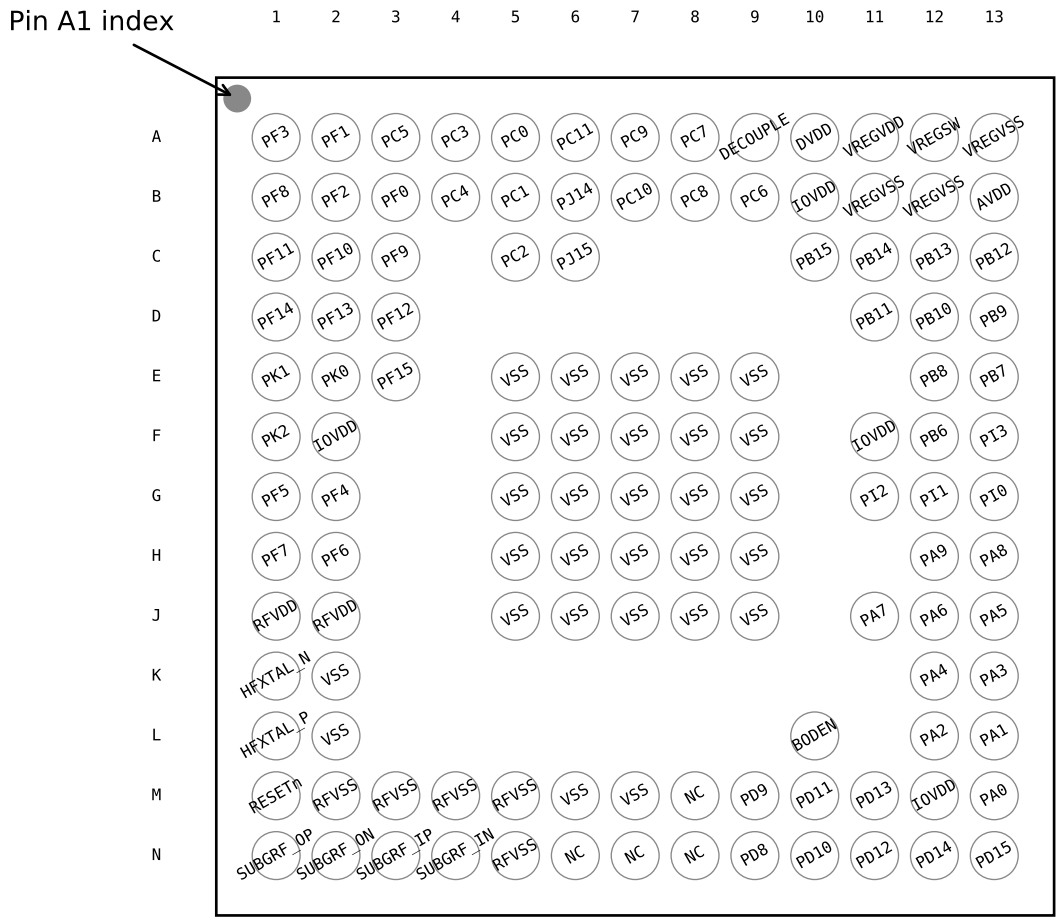

Figure 6.3. BGA125 Sub-GHz Device Pinout

The following table provides package pin connections and general descriptions of pin functionality. For detailed information on the supported features for each GPIO pin, see 6.9 GPIO Functionality Table or 6.10 Alternate Functionality Overview.

Table 6.3. BGA125 Sub-GHz Device Pinout

Pin Name	Pin(s)	Description	Pin Name	Pin(s)	Description
PF3	A1	GPIO (5V)	PF1	A2	GPIO (5V)
PC5	A3	GPIO (5V)	PC3	A4	GPIO (5V)
PC0	A5	GPIO (5V)	PC11	A6	GPIO (5V)
PC9	A7	GPIO (5V)	PC7	A8	GPIO (5V)
DECOUPLE	A9	Decouple output for on-chip voltage regulator. An external decoupling capacitor is required at this pin. This pin should not be used to power any external circuits.	DVDD	A10	Digital power supply.

Pin Name	Pin(s)	Description	Pin Name	Pin(s)	Description
VREGVDD	A11	Voltage regulator VDD input	VREGSW	A12	DCDC regulator switching node
VREGVSS	A13 B11 B12	Voltage regulator VSS	PF8	B1	GPIO (5V)
PF2	B2	GPIO (5V)	PF0	B3	GPIO (5V)
PC4	B4	GPIO (5V)	PC1	B5	GPIO (5V)
PJ14	B6	GPIO (5V)	PC10	B7	GPIO (5V)
PC8	B8	GPIO (5V)	PC6	B9	GPIO (5V)
IOVDD	B10 F2 F11 M12	Digital IO power supply.	AVDD	B13	Analog power supply.
PF11	C1	GPIO (5V)	PF10	C2	GPIO (5V)
PF9	C3	GPIO (5V)	PC2	C5	GPIO (5V)
PJ15	C6	GPIO (5V)	PB15	C10	GPIO
PB14	C11	GPIO	PB13	C12	GPIO
PB12	C13	GPIO	PF14	D1	GPIO (5V)
PF13	D2	GPIO (5V)	PF12	D3	GPIO (5V)
PB11	D11	GPIO	PB10	D12	GPIO (5V)
PB9	D13	GPIO (5V)	PK1	E1	GPIO (5V)
PK0	E2	GPIO	PF15	E3	GPIO (5V)
VSS	E5 E6 E7 E8 E9 F5 F6 F7 F8 F9 G5 G6 G7 G8 G9 H5 H6 H7 H8 H9 J5 J6 J7 J8 J9 K2 L2 M6 M7	Ground	PB8	E12	GPIO (5V)
PB7	E13	GPIO (5V)	PK2	F1	GPIO (5V)

Pin Name	Pin(s)	Description	Pin Name	Pin(s)	Description
PB6	F12	GPIO (5V)	PI3	F13	GPIO (5V)
PF5	G1	GPIO (5V)	PF4	G2	GPIO (5V)
PI2	G11	GPIO (5V)	PI1	G12	GPIO (5V)
PI0	G13	GPIO (5V)	PF7	H1	GPIO (5V)
PF6	H2	GPIO (5V)	PA9	H12	GPIO (5V)
PA8	H13	GPIO (5V)	RFVDD	J1 J2	Radio power supply
PA7	J11	GPIO (5V)	PA6	J12	GPIO (5V)
PA5	J13	GPIO (5V)	HFXTAL_N	K1	High Frequency Crystal input pin.
PA4	K12	GPIO	PA3	K13	GPIO
HFXTAL_P	L1	High Frequency Crystal output pin.	BODEN	L10	Brown-Out Detector Enable. This pin may be left disconnected or tied to AVDD.
PA2	L12	GPIO	PA1	L13	GPIO
RESETn	M1	Reset input, active low. This pin is internally pulled up to AVDD. To apply an external reset source to this pin, it is required to only drive this pin low during reset, and let the internal pull-up ensure that reset is released.	RFVSS	M2 M3 M4 M5 N5	Radio Ground
NC	M8 N6 N7 N8	No Connect.	PD9	M9	GPIO (5V)
PD11	M10	GPIO (5V)	PD13	M11	GPIO
PA0	M13	GPIO	SUBGRF_OP	N1	Sub GHz Differential RF output, positive path.
SUBGRF_ON	N2	Sub GHz Differential RF output, negative path.	SUBGRF_IP	N3	Sub GHz Differential RF input, positive path.
SUBGRF_IN	N4	Sub GHz Differential RF input, negative path.	PD8	N9	GPIO (5V)
PD10	N10	GPIO (5V)	PD12	N11	GPIO (5V)
PD14	N12	GPIO	PD15	N13	GPIO

Note:

1. GPIO with 5V tolerance are indicated by (5V).

6.4 QFN68 2.4 GHz and Sub-GHz Device Pinout

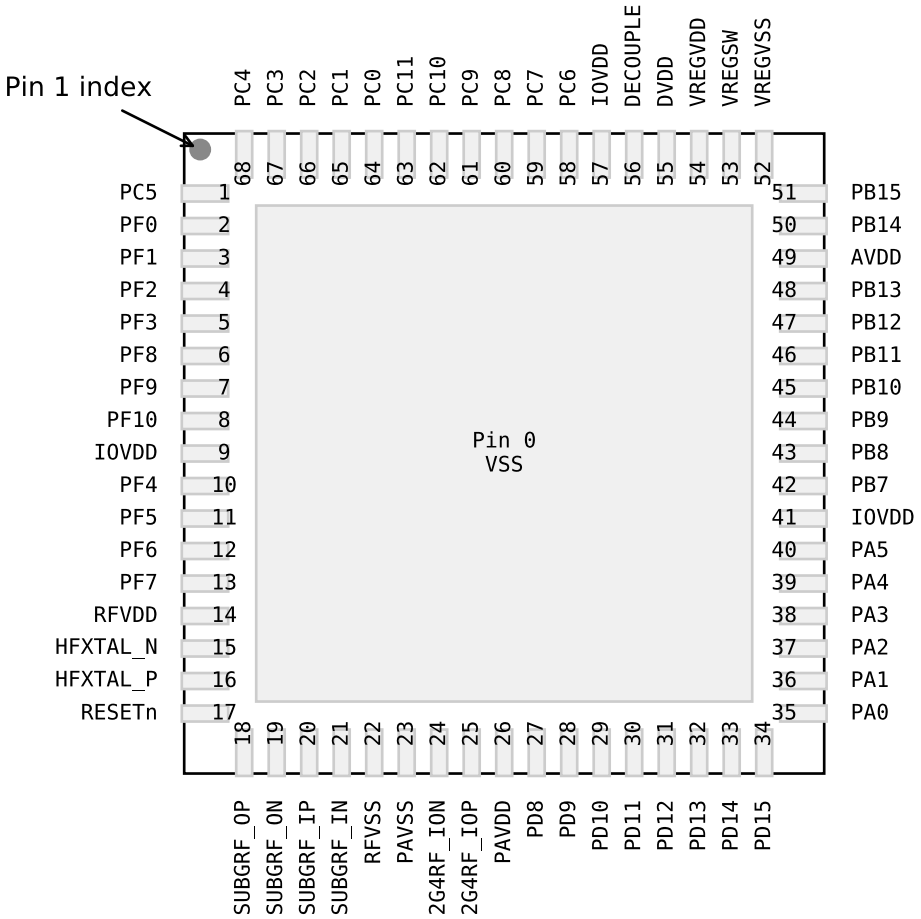

Figure 6.4. QFN68 2.4 GHz and Sub-GHz Device Pinout

The following table provides package pin connections and general descriptions of pin functionality. For detailed information on the supported features for each GPIO pin, see 6.9 GPIO Functionality Table or 6.10 Alternate Functionality Overview.

Table 6.4. QFN68 2.4 GHz and Sub-GHz Device Pinout

Pin Name	Pin(s)	Description	Pin Name	Pin(s)	Description
VSS	0	Ground	PC5	1	GPIO (5V)
PF0	2	GPIO (5V)	PF1	3	GPIO (5V)
PF2	4	GPIO (5V)	PF3	5	GPIO (5V)
PF8	6	GPIO (5V)	PF9	7	GPIO (5V)
PF10	8	GPIO (5V)	IOVDD	9 41 57	Digital IO power supply.
PF4	10	GPIO (5V)	PF5	11	GPIO (5V)

Pin Name	Pin(s)	Description	Pin Name	Pin(s)	Description
PF6	12	GPIO (5V)	PF7	13	GPIO (5V)
RFVDD	14	Radio power supply	HFXTAL_N	15	High Frequency Crystal input pin.
HFXTAL_P	16	High Frequency Crystal output pin.	RESETn	17	Reset input, active low. This pin is internally pulled up to AVDD. To apply an external reset source to this pin, it is required to only drive this pin low during reset, and let the internal pull-up ensure that reset is released.
SUBGRF_OP	18	Sub GHz Differential RF output, positive path.	SUBGRF_ON	19	Sub GHz Differential RF output, negative path.
SUBGRF_IP	20	Sub GHz Differential RF input, positive path.	SUBGRF_IN	21	Sub GHz Differential RF input, negative path.
RFVSS	22	Radio Ground	PAVSS	23	Power Amplifier (PA) voltage regulator VSS
2G4RF_ION	24	2.4 GHz Differential RF input/output, negative path. This pin should be externally grounded.	2G4RF_IOP	25	2.4 GHz Differential RF input/output, positive path.
PAVDD	26	Power Amplifier (PA) voltage regulator VDD input	PD8	27	GPIO (5V)
PD9	28	GPIO (5V)	PD10	29	GPIO (5V)
PD11	30	GPIO (5V)	PD12	31	GPIO (5V)
PD13	32	GPIO	PD14	33	GPIO
PD15	34	GPIO	PA0	35	GPIO
PA1	36	GPIO	PA2	37	GPIO
PA3	38	GPIO	PA4	39	GPIO
PA5	40	GPIO (5V)	PB7	42	GPIO (5V)
PB8	43	GPIO (5V)	PB9	44	GPIO (5V)
PB10	45	GPIO (5V)	PB11	46	GPIO
PB12	47	GPIO	PB13	48	GPIO
AVDD	49	Analog power supply.	PB14	50	GPIO
PB15	51	GPIO	VREGVSS	52	Voltage regulator VSS
VREGSW	53	DCDC regulator switching node	VREGVDD	54	Voltage regulator VDD input
DVDD	55	Digital power supply.	DECOUPLE	56	Decouple output for on-chip voltage regulator. An external decoupling capacitor is required at this pin. This pin should not be used to power any external circuits.
PC6	58	GPIO (5V)	PC7	59	GPIO (5V)
PC8	60	GPIO (5V)	PC9	61	GPIO (5V)
PC10	62	GPIO (5V)	PC11	63	GPIO (5V)
PC0	64	GPIO (5V)	PC1	65	GPIO (5V)
PC2	66	GPIO (5V)	PC3	67	GPIO (5V)
PC4	68	GPIO (5V)			

Pin Name	Pin(s)	Description	Pin Name	Pin(s)	Description

Note:

1. GPIO with 5V tolerance are indicated by (5V).

6.5 QFN68 Sub-GHz Device Pinout

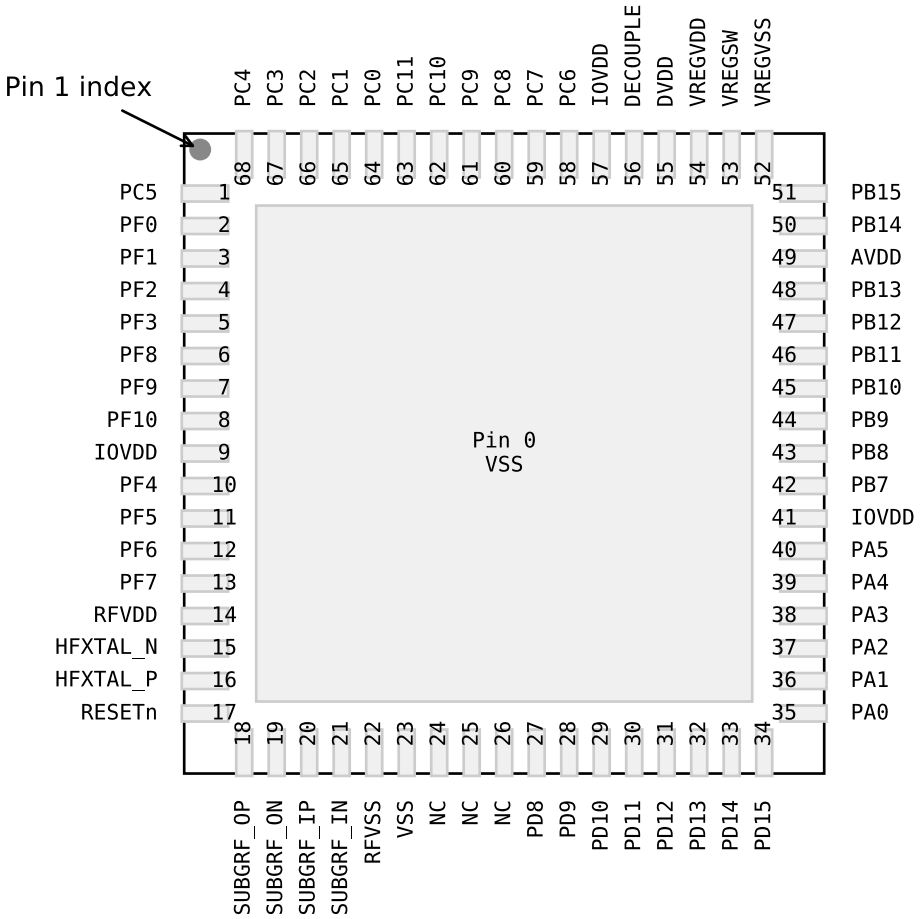

Figure 6.5. QFN68 Sub-GHz Device Pinout

The following table provides package pin connections and general descriptions of pin functionality. For detailed information on the supported features for each GPIO pin, see 6.9 GPIO Functionality Table or 6.10 Alternate Functionality Overview.

Table 6.5. QFN68 Sub-GHz Device Pinout

Pin Name	Pin(s)	Description	Pin Name	Pin(s)	Description
VSS	0 23	Ground	PC5	1	GPIO (5V)
PF0	2	GPIO (5V)	PF1	3	GPIO (5V)
PF2	4	GPIO (5V)	PF3	5	GPIO (5V)
PF8	6	GPIO (5V)	PF9	7	GPIO (5V)
PF10	8	GPIO (5V)	IOVDD	9 41 57	Digital IO power supply.

Pin Name	Pin(s)	Description	Pin Name	Pin(s)	Description
PF4	10	GPIO (5V)	PF5	11	GPIO (5V)
PF6	12	GPIO (5V)	PF7	13	GPIO (5V)
RFVDD	14	Radio power supply	HFXTAL_N	15	High Frequency Crystal input pin.
HFXTAL_P	16	High Frequency Crystal output pin.	RESETn	17	Reset input, active low. This pin is internally pulled up to AVDD. To apply an external reset source to this pin, it is required to only drive this pin low during reset, and let the internal pull-up ensure that reset is released.
SUBGRF_OP	18	Sub GHz Differential RF output, positive path.	SUBGRF_ON	19	Sub GHz Differential RF output, negative path.
SUBGRF_IP	20	Sub GHz Differential RF input, positive path.	SUBGRF_IN	21	Sub GHz Differential RF input, negative path.
RFVSS	22	Radio Ground	NC	24 25 26	No Connect.
PD8	27	GPIO (5V)	PD9	28	GPIO (5V)
PD10	29	GPIO (5V)	PD11	30	GPIO (5V)
PD12	31	GPIO (5V)	PD13	32	GPIO
PD14	33	GPIO	PD15	34	GPIO
PA0	35	GPIO	PA1	36	GPIO
PA2	37	GPIO	PA3	38	GPIO
PA4	39	GPIO	PA5	40	GPIO (5V)
PB7	42	GPIO (5V)	PB8	43	GPIO (5V)
PB9	44	GPIO (5V)	PB10	45	GPIO (5V)
PB11	46	GPIO	PB12	47	GPIO
PB13	48	GPIO	AVDD	49	Analog power supply.
PB14	50	GPIO	PB15	51	GPIO
VREGVSS	52	Voltage regulator VSS	VREGSW	53	DCDC regulator switching node
VREGVDD	54	Voltage regulator VDD input	DVDD	55	Digital power supply.
DECOUPLE	56	Decouple output for on-chip voltage regulator. An external decoupling capacitor is required at this pin. This pin should not be used to power any external circuits.	PC6	58	GPIO (5V)
PC7	59	GPIO (5V)	PC8	60	GPIO (5V)
PC9	61	GPIO (5V)	PC10	62	GPIO (5V)
PC11	63	GPIO (5V)	PC0	64	GPIO (5V)
PC1	65	GPIO (5V)	PC2	66	GPIO (5V)
PC3	67	GPIO (5V)	PC4	68	GPIO (5V)

Note:

1. GPIO with 5V tolerance are indicated by (5V).

6.6 QFN48 2.4 GHz and Sub-GHz Device Pinout

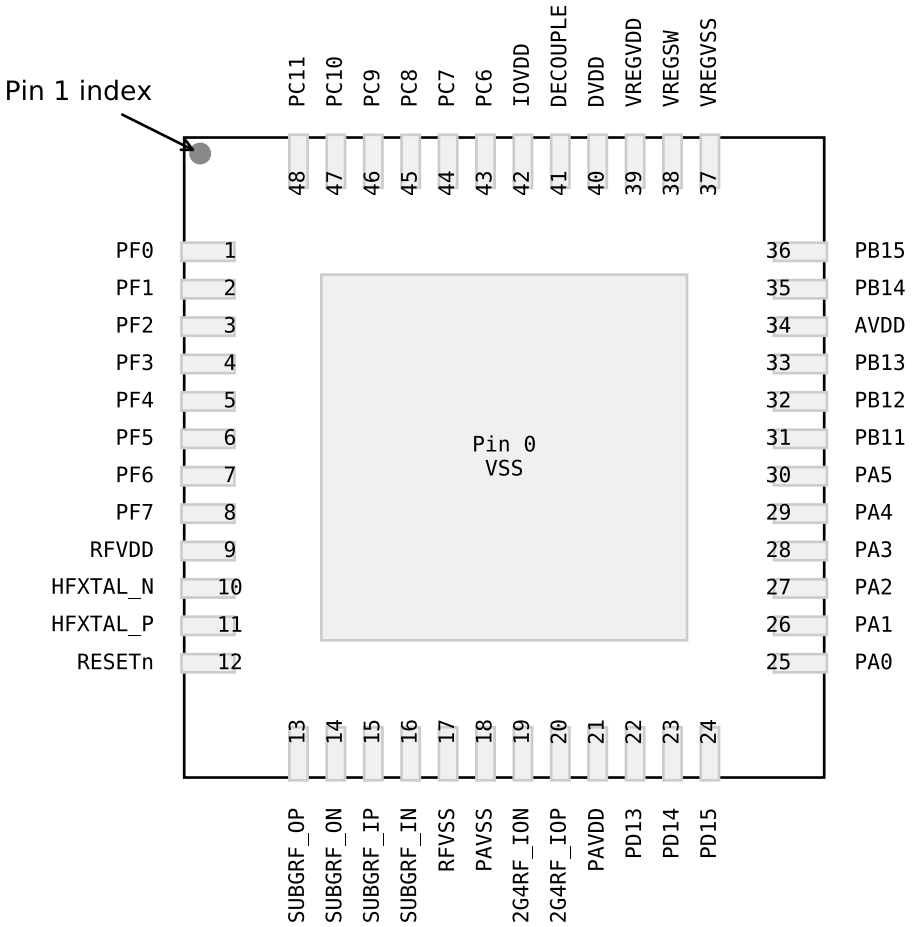

Figure 6.6. QFN48 2.4 GHz and Sub-GHz Device Pinout

The following table provides package pin connections and general descriptions of pin functionality. For detailed information on the supported features for each GPIO pin, see 6.9 GPIO Functionality Table or 6.10 Alternate Functionality Overview.

Table 6.6. QFN48 2.4 GHz and Sub-GHz Device Pinout

Pin Name	Pin(s)	Description	Pin Name	Pin(s)	Description
VSS	0	Ground	PF0	1	GPIO (5V)
PF1	2	GPIO (5V)	PF2	3	GPIO (5V)
PF3	4	GPIO (5V)	PF4	5	GPIO (5V)
PF5	6	GPIO (5V)	PF6	7	GPIO (5V)
PF7	8	GPIO (5V)	RFVDD	9	Radio power supply
HFXTAL_N	10	High Frequency Crystal input pin.	HFXTAL_P	11	High Frequency Crystal output pin.

Pin Name	Pin(s)	Description	Pin Name	Pin(s)	Description
RESETn	12	Reset input, active low. This pin is internally pulled up to AVDD. To apply an external reset source to this pin, it is required to only drive this pin low during reset, and let the internal pull-up ensure that reset is released.	SUBGRF_OP	13	Sub GHz Differential RF output, positive path.
SUBGRF_ON	14	Sub GHz Differential RF output, negative path.	SUBGRF_IP	15	Sub GHz Differential RF input, positive path.
SUBGRF_IN	16	Sub GHz Differential RF input, negative path.	RFVSS	17	Radio Ground
PAVSS	18	Power Amplifier (PA) voltage regulator VSS	2G4RF_ION	19	2.4 GHz Differential RF input/output, negative path. This pin should be externally grounded.
2G4RF_IOP	20	2.4 GHz Differential RF input/output, positive path.	PAVDD	21	Power Amplifier (PA) voltage regulator VDD input
PD13	22	GPIO	PD14	23	GPIO
PD15	24	GPIO	PA0	25	GPIO
PA1	26	GPIO	PA2	27	GPIO
PA3	28	GPIO	PA4	29	GPIO
PA5	30	GPIO (5V)	PB11	31	GPIO
PB12	32	GPIO	PB13	33	GPIO
AVDD	34	Analog power supply.	PB14	35	GPIO
PB15	36	GPIO	VREGVSS	37	Voltage regulator VSS
VREGSW	38	DCDC regulator switching node	VREGVDD	39	Voltage regulator VDD input
DVDD	40	Digital power supply.	DECOUPLE	41	Decouple output for on-chip voltage regulator. An external decoupling capacitor is required at this pin. This pin should not be used to power any external circuits.
IOVDD	42	Digital IO power supply.	PC6	43	GPIO (5V)
PC7	44	GPIO (5V)	PC8	45	GPIO (5V)
PC9	46	GPIO (5V)	PC10	47	GPIO (5V)
PC11	48	GPIO (5V)			

Note:

1. GPIO with 5V tolerance are indicated by (5V).

6.7 QFN48 2.4 GHz Device Pinout

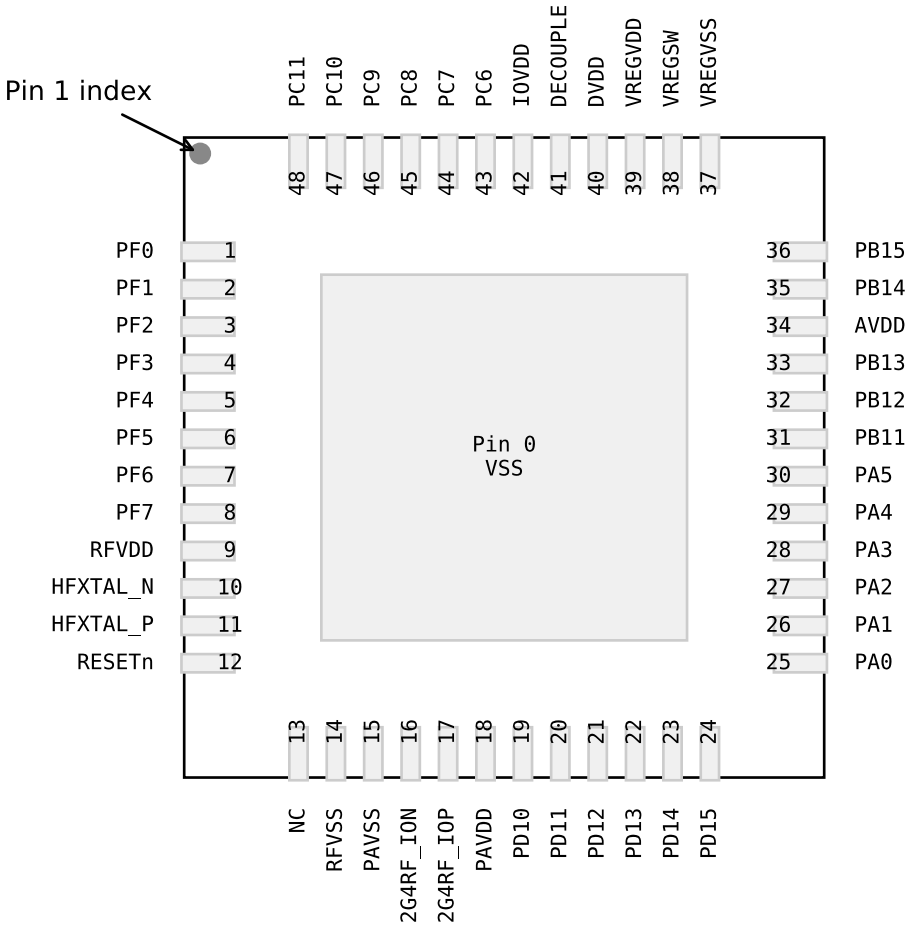

Figure 6.7. QFN48 2.4 GHz Device Pinout

The following table provides package pin connections and general descriptions of pin functionality. For detailed information on the supported features for each GPIO pin, see 6.9 GPIO Functionality Table or 6.10 Alternate Functionality Overview.

Table 6.7. QFN48 2.4 GHz Device Pinout

Pin Name	Pin(s)	Description	Pin Name	Pin(s)	Description
VSS	0	Ground	PF0	1	GPIO (5V)
PF1	2	GPIO (5V)	PF2	3	GPIO (5V)
PF3	4	GPIO (5V)	PF4	5	GPIO (5V)
PF5	6	GPIO (5V)	PF6	7	GPIO (5V)
PF7	8	GPIO (5V)	RFVDD	9	Radio power supply
HFXTAL_N	10	High Frequency Crystal input pin.	HFXTAL_P	11	High Frequency Crystal output pin.

Pin Name	Pin(s)	Description	Pin Name	Pin(s)	Description
RESETn	12	Reset input, active low. This pin is internally pulled up to AVDD. To apply an external reset source to this pin, it is required to only drive this pin low during reset, and let the internal pull-up ensure that reset is released.	NC	13	No Connect.
RFVSS	14	Radio Ground	PAVSS	15	Power Amplifier (PA) voltage regulator VSS
2G4RF_ION	16	2.4 GHz Differential RF input/output, negative path. This pin should be externally grounded.	2G4RF_IOP	17	2.4 GHz Differential RF input/output, positive path.
PAVDD	18	Power Amplifier (PA) voltage regulator VDD input	PD10	19	GPIO (5V)
PD11	20	GPIO (5V)	PD12	21	GPIO (5V)
PD13	22	GPIO	PD14	23	GPIO
PD15	24	GPIO	PA0	25	GPIO
PA1	26	GPIO	PA2	27	GPIO
PA3	28	GPIO	PA4	29	GPIO
PA5	30	GPIO (5V)	PB11	31	GPIO
PB12	32	GPIO	PB13	33	GPIO
AVDD	34	Analog power supply.	PB14	35	GPIO
PB15	36	GPIO	VREGVSS	37	Voltage regulator VSS
VREGSW	38	DCDC regulator switching node	VREGVDD	39	Voltage regulator VDD input
DVDD	40	Digital power supply.	DECOUPLE	41	Decouple output for on-chip voltage regulator. An external decoupling capacitor is required at this pin. This pin should not be used to power any external circuits.
IOVDD	42	Digital IO power supply.	PC6	43	GPIO (5V)
PC7	44	GPIO (5V)	PC8	45	GPIO (5V)
PC9	46	GPIO (5V)	PC10	47	GPIO (5V)
PC11	48	GPIO (5V)			

Note:

1. GPIO with 5V tolerance are indicated by (5V).

6.8 QFN48 Sub-GHz Device Pinout

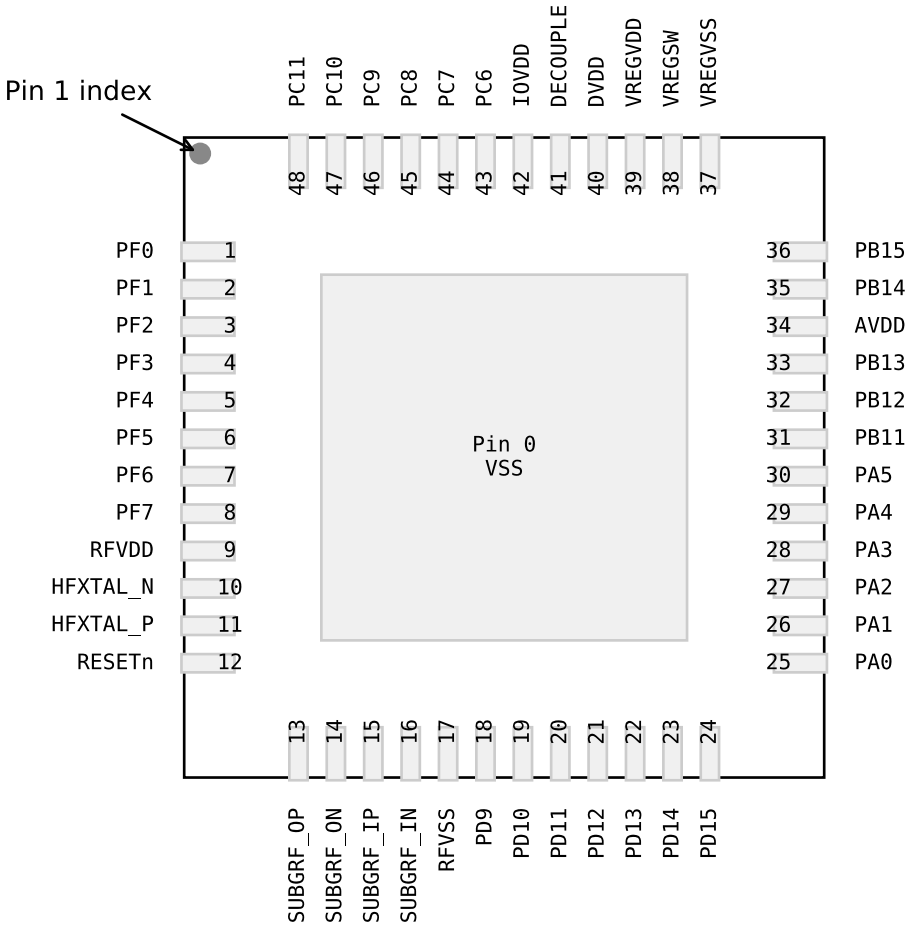

Figure 6.8. QFN48 Sub-GHz Device Pinout

The following table provides package pin connections and general descriptions of pin functionality. For detailed information on the supported features for each GPIO pin, see 6.9 GPIO Functionality Table or 6.10 Alternate Functionality Overview.

Table 6.8. QFN48 Sub-GHz Device Pinout

Pin Name	Pin(s)	Description	Pin Name	Pin(s)	Description
VSS	0	Ground	PF0	1	GPIO (5V)
PF1	2	GPIO (5V)	PF2	3	GPIO (5V)
PF3	4	GPIO (5V)	PF4	5	GPIO (5V)
PF5	6	GPIO (5V)	PF6	7	GPIO (5V)
PF7	8	GPIO (5V)	RFVDD	9	Radio power supply
HFXTAL_N	10	High Frequency Crystal input pin.	HFXTAL_P	11	High Frequency Crystal output pin.

Pin Name	Pin(s)	Description	Pin Name	Pin(s)	Description
RESETn	12	Reset input, active low. This pin is internally pulled up to AVDD. To apply an external reset source to this pin, it is required to only drive this pin low during reset, and let the internal pull-up ensure that reset is released.	SUBGRF_OP	13	Sub GHz Differential RF output, positive path.
SUBGRF_ON	14	Sub GHz Differential RF output, negative path.	SUBGRF_IP	15	Sub GHz Differential RF input, positive path.
SUBGRF_IN	16	Sub GHz Differential RF input, negative path.	RFVSS	17	Radio Ground
PD9	18	GPIO (5V)	PD10	19	GPIO (5V)
PD11	20	GPIO (5V)	PD12	21	GPIO (5V)
PD13	22	GPIO	PD14	23	GPIO
PD15	24	GPIO	PA0	25	GPIO
PA1	26	GPIO	PA2	27	GPIO
PA3	28	GPIO	PA4	29	GPIO
PA5	30	GPIO (5V)	PB11	31	GPIO
PB12	32	GPIO	PB13	33	GPIO
AVDD	34	Analog power supply.	PB14	35	GPIO
PB15	36	GPIO	VREGVSS	37	Voltage regulator VSS
VREGSW	38	DCDC regulator switching node	VREGVDD	39	Voltage regulator VDD input
DVDD	40	Digital power supply.	DECOUPLE	41	Decouple output for on-chip voltage regulator. An external decoupling capacitor is required at this pin. This pin should not be used to power any external circuits.
IOVDD	42	Digital IO power supply.	PC6	43	GPIO (5V)
PC7	44	GPIO (5V)	PC8	45	GPIO (5V)
PC9	46	GPIO (5V)	PC10	47	GPIO (5V)
PC11	48	GPIO (5V)			

Note:

1. GPIO with 5V tolerance are indicated by (5V).

6.9 GPIO Functionality Table

A wide selection of alternate functionality is available for multiplexing to various pins. The following table shows the name of each GPIO pin, followed by the functionality available on that pin. Refer to 6.10 Alternate Functionality Overview for a list of GPIO locations available for each function.

Table 6.9. GPIO Functionality Table

GPIO Name	Pin Alternate Functionality / Description				
	Analog	Timers	Communication	Radio	Other
PA0	BUSDY BUSCX ADC0_EXTN	TIM0_CC0 #0 TIM0_CC1 #31 TIM0_CC2 #30 TIM0_CDTI0 #29 TIM0_CDTI1 #28 TIM0_CDTI2 #27 TIM1_CC0 #0 TIM1_CC1 #31 TIM1_CC2 #30 TIM1_CC3 #29 WTIM0_CC0 #0 LETIM0_OUT0 #0 LETIM0_OUT1 #31 PCNT0_S0IN #0 PCNT0_S1IN #31	US0_TX #0 US0_RX #31 US0_CLK #30 US0_CS #29 US0_CTS #28 US0_RTS #27 US1_TX #0 US1_RX #31 US1_CLK #30 US1_CS #29 US1_CTS #28 US1_RTS #27 LEU0_TX #0 LEU0_RX #31 I2C0_SDA #0 I2C0_SCL #31	FRC_DCLK #0 FRC_DOUT #31 FRC_DFRAME #30 MODEM_DCLK #0 MODEM_DIN #31 MODEM_DOUT #30 MODEM_ANT0 #29 MODEM_ANT1 #28	CMU_CLK1 #0 PRS_CH6 #0 PRS_CH7 #10 PRS_CH8 #9 PRS_CH9 #8 ACMP0_O #0 ACMP1_O #0 LES_CH8

GPIO Name	Pin Alternate Functionality / Description				
	Analog	Timers	Communication	Radio	Other
PA1	BUSCY BUSDX ADC0_EXTP VDAC0_EXT	TIM0_CC0 #1 TIM0_CC1 #0 TIM0_CC2 #31 TIM0_CDTI0 #30 TIM0_CDTI1 #29 TIM0_CDTI2 #28 TIM1_CC0 #1 TIM1_CC1 #0 TIM1_CC2 #31 TIM1_CC3 #30 WTIM0_CC0 #1 LETIM0_OUT0 #1 LETIM0_OUT1 #0 PCNT0_S0IN #1 PCNT0_S1IN #0	US0_TX #1 US0_RX #0 US0_CLK #31 US0_CS #30 US0_CTS #29 US0_RTS #28 US1_TX #1 US1_RX #0 US1_CLK #31 US1_CS #30 US1_CTS #29 US1_RTS #28 LEU0_TX #1 LEU0_RX #0 I2C0_SDA #1 I2C0_SCL #0	FRC_DCLK #1 FRC_DOUT #0 FRC_DFRAME #31 MODEM_DCLK #1 MODEM_DIN #0 MODEM_DOUT #31 MODEM_ANT0 #30 MODEM_ANT1 #29	CMU_CLK0 #0 PRS_CH6 #1 PRS_CH7 #0 PRS_CH8 #10 PRS_CH9 #9 ACMP0_O #1 ACMP1_O #1 LES_CH9
PA2	VDAC0_OUT1ALT / OPA1_OUTALT #1 BUSDY BUSCX OPA0_P	TIM0_CC0 #2 TIM0_CC1 #1 TIM0_CC2 #0 TIM0_CDTI0 #31 TIM0_CDTI1 #30 TIM0_CDTI2 #29 TIM1_CC0 #2 TIM1_CC1 #1 TIM1_CC2 #0 TIM1_CC3 #31 WTIM0_CC0 #2 WTIM0_CC1 #0 LETIM0_OUT0 #2 LETIM0_OUT1 #1 PCNT0_S0IN #2 PCNT0_S1IN #1	US0_TX #2 US0_RX #1 US0_CLK #0 US0_CS #31 US0_CTS #30 US0_RTS #29 US1_TX #2 US1_RX #1 US1_CLK #0 US1_CS #31 US1_CTS #30 US1_RTS #29 LEU0_TX #2 LEU0_RX #1 I2C0_SDA #2 I2C0_SCL #1	FRC_DCLK #2 FRC_DOUT #1 FRC_DFRAME #0 MODEM_DCLK #2 MODEM_DIN #1 MODEM_DOUT #0 MODEM_ANT0 #31 MODEM_ANT1 #30	PRS_CH6 #2 PRS_CH7 #1 PRS_CH8 #0 PRS_CH9 #10 ACMP0_O #2 ACMP1_O #2 LES_CH10

GPIO Name	Pin Alternate Functionality / Description				
	Analog	Timers	Communication	Radio	Other
PA3	BUSCY BUSDX VDAC0_OUT0 / OPA0_OUT	TIM0_CC0 #3 TIM0_CC1 #2 TIM0_CC2 #1 TIM0_CDTI0 #0 TIM0_CDTI1 #31 TIM0_CDTI2 #30 TIM1_CC0 #3 TIM1_CC1 #2 TIM1_CC2 #1 TIM1_CC3 #0 WTIM0_CC0 #3 WTIM0_CC1 #1 LETIM0_OUT0 #3 LETIM0_OUT1 #2 PCNT0_S0IN #3 PCNT0_S1IN #2	US0_TX #3 US0_RX #2 US0_CLK #1 US0_CS #0 US0_CTS #31 US0_RTS #30 US1_TX #3 US1_RX #2 US1_CLK #1 US1_CS #0 US1_CTS #31 US1_RTS #30 LEU0_TX #3 LEU0_RX #2 I2C0_SDA #3 I2C0_SCL #2	FRC_DCLK #3 FRC_DOUT #2 FRC_DFRAME #1 MODEM_DCLK #3 MODEM_DIN #2 MODEM_DOUT #1 MODEM_ANT0 #0 MODEM_ANT1 #31	PRS_CH6 #3 PRS_CH7 #2 PRS_CH8 #1 PRS_CH9 #0 ACMP0_O #3 ACMP1_O #3 LES_CH11 GPIO_EM4WU8
PA4	VDAC0_OUT1ALT / OPA1_OUTALT #2 BUSDY BUSCX OPA0_N	TIM0_CC0 #4 TIM0_CC1 #3 TIM0_CC2 #2 TIM0_CDTI0 #1 TIM0_CDTI1 #0 TIM0_CDTI2 #31 TIM1_CC0 #4 TIM1_CC1 #3 TIM1_CC2 #2 TIM1_CC3 #1 WTIM0_CC0 #4 WTIM0_CC1 #2 WTIM0_CC2 #0 LETIM0_OUT0 #4 LETIM0_OUT1 #3 PCNT0_S0IN #4 PCNT0_S1IN #3	US0_TX #4 US0_RX #3 US0_CLK #2 US0_CS #1 US0_CTS #0 US0_RTS #31 US1_TX #4 US1_RX #3 US1_CLK #2 US1_CS #1 US1_CTS #0 US1_RTS #31 LEU0_TX #4 LEU0_RX #3 I2C0_SDA #4 I2C0_SCL #3	FRC_DCLK #4 FRC_DOUT #3 FRC_DFRAME #2 MODEM_DCLK #4 MODEM_DIN #3 MODEM_DOUT #2 MODEM_ANT0 #1 MODEM_ANT1 #0	PRS_CH6 #4 PRS_CH7 #3 PRS_CH8 #2 PRS_CH9 #1 ACMP0_O #4 ACMP1_O #4 LES_CH12

GPIO Name	Pin Alternate Functionality / Description				
	Analog	Timers	Communication	Radio	Other
PA5	VDAC0_OUT0ALT / OPA0_OUTALT #0 BUSCY BUSDX	TIM0_CC0 #5 TIM0_CC1 #4 TIM0_CC2 #3 TIM0_CDTI0 #2 TIM0_CDTI1 #1 TIM0_CDTI2 #0 TIM1_CC0 #5 TIM1_CC1 #4 TIM1_CC2 #3 TIM1_CC3 #2 WTIM0_CC0 #5 WTIM0_CC1 #3 WTIM0_CC2 #1 LETIM0_OUT0 #5 LETIM0_OUT1 #4 PCNT0_S0IN #5 PCNT0_S1IN #4	US0_TX #5 US0_RX #4 US0_CLK #3 US0_CS #2 US0_CTS #1 US0_RTS #0 US1_TX #5 US1_RX #4 US1_CLK #3 US1_CS #2 US1_CTS #1 US1_RTS #0 US2_TX #0 US2_RX #31 US2_CLK #30 US2_CS #29 US2_CTS #28 US2_RTS #27 LEU0_TX #5 LEU0_RX #4 I2C0_SDA #5 I2C0_SCL #4	FRC_DCLK #5 FRC_DOUT #4 FRC_DFRAME #3 MODEM_DCLK #5 MODEM_DIN #4 MODEM_DOUT #3 MODEM_ANT0 #2 MODEM_ANT1 #1	CMU_CLKI0 #4 PRS_CH6 #5 PRS_CH7 #4 PRS_CH8 #3 PRS_CH9 #2 ACMP0_O #5 ACMP1_O #5 LES_CH13 ETM_TCLK #1
PA6	BUSDY BUSCX	WTIM0_CC0 #6 WTIM0_CC1 #4 WTIM0_CC2 #2 PCNT1_S0IN #0 PCNT1_S1IN #31 PCNT2_S0IN #0 PCNT2_S1IN #31	US2_TX #1 US2_RX #0 US2_CLK #31 US2_CS #30 US2_CTS #29 US2_RTS #28 I2C1_SDA #0 I2C1_SCL #31		LES_CH14 ETM_TD0 #1

GPIO Name	Pin Alternate Functionality / Description				
	Analog	Timers	Communication	Radio	Other
PA7	BUSCY BUSDX	WTIM0_CC0 #7 WTIM0_CC1 #5 WTIM0_CC2 #3 PCNT1_S0IN #1 PCNT1_S1IN #0 PCNT2_S0IN #1 PCNT2_S1IN #0	US2_TX #2 US2_RX #1 US2_CLK #0 US2_CS #31 US2_CTS #30 US2_RTS #29 I2C1_SDA #1 I2C1_SCL #0		LES_CH15 ETM_TD1 #1
PA8	BUSACMP0Y BUSACMP0X	WTIM0_CC0 #8 WTIM0_CC1 #6 WTIM0_CC2 #4 WTIM0_CDTI0 #0 PCNT1_S0IN #2 PCNT1_S1IN #1 PCNT2_S0IN #2 PCNT2_S1IN #1	US2_TX #3 US2_RX #2 US2_CLK #1 US2_CS #0 US2_CTS #31 US2_RTS #30 I2C1_SDA #2 I2C1_SCL #1		LES_ALTEX0 ETM_TD2 #1
PA9	BUSACMP0Y BUSACMP0X	WTIM0_CC0 #9 WTIM0_CC1 #7 WTIM0_CC2 #5 WTIM0_CDTI0 #1 PCNT1_S0IN #3 PCNT1_S1IN #2 PCNT2_S0IN #3 PCNT2_S1IN #2	US2_TX #4 US2_RX #3 US2_CLK #2 US2_CS #1 US2_CTS #0 US2_RTS #31 I2C1_SDA #3 I2C1_SCL #2		LES_ALTEX1 ETM_TD3 #1

GPIO Name	Pin Alternate Functionality / Description				
	Analog	Timers	Communication	Radio	Other
PB6	BUSDY BUSCX	WTIM0_CC0 #10 WTIM0_CC1 #8 WTIM0_CC2 #6 WTIM0_CDTI0 #2 WTIM0_CDTI1 #0 PCNT1_S0IN #6 PCNT1_S1IN #5 PCNT2_S0IN #6 PCNT2_S1IN #5	US2_TX #9 US2_RX #8 US2_CLK #7 US2_CS #6 US2_CTS #5 US2_RTS #4 US3_TX #10 US3_RX #9 US3_CLK #8 US3_CS #7 US3_CTS #6 US3_RTS #5 I2C1_SDA #6 I2C1_SCL #5		CMU_CLKI0 #3 ETM_TD1 #2
PB7	BUSCY BUSDX	WTIM0_CC0 #11 WTIM0_CC1 #9 WTIM0_CC2 #7 WTIM0_CDTI0 #3 WTIM0_CDTI1 #1 PCNT1_S0IN #7 PCNT1_S1IN #6 PCNT2_S0IN #7 PCNT2_S1IN #6	US2_TX #10 US2_RX #9 US2_CLK #8 US2_CS #7 US2_CTS #6 US2_RTS #5 US3_TX #11 US3_RX #10 US3_CLK #9 US3_CS #8 US3_CTS #7 US3_RTS #6 I2C1_SDA #7 I2C1_SCL #6		ETM_TD2 #2

GPIO Name	Pin Alternate Functionality / Description				
	Analog	Timers	Communication	Radio	Other
PB8	BUSDY BUSCX	WTIM0_CC0 #12 WTIM0_CC1 #10 WTIM0_CC2 #8 WTIM0_CDTI0 #4 WTIM0_CDTI1 #2 WTIM0_CDTI2 #0 PCNT1_S0IN #8 PCNT1_S1IN #7 PCNT2_S0IN #8 PCNT2_S1IN #7	US2_TX #11 US2_RX #10 US2_CLK #9 US2_CS #8 US2_CTS #7 US2_RTS #6 US3_TX #12 US3_RX #11 US3_CLK #10 US3_CS #9 US3_CTS #8 US3_RTS #7 I2C1_SDA #8 I2C1_SCL #7		ETM_TD3 #2
PB9	OPA2_OUTALT #0 BUSCY BUSDX	WTIM0_CC0 #13 WTIM0_CC1 #11 WTIM0_CC2 #9 WTIM0_CDTI0 #5 WTIM0_CDTI1 #3 WTIM0_CDTI2 #1 PCNT1_S0IN #9 PCNT1_S1IN #8 PCNT2_S0IN #9 PCNT2_S1IN #8	US2_TX #12 US2_RX #11 US2_CLK #10 US2_CS #9 US2_CTS #8 US2_RTS #7 US3_TX #13 US3_RX #12 US3_CLK #11 US3_CS #10 US3_CTS #9 US3_RTS #8 I2C1_SDA #9 I2C1_SCL #8		

GPIO Name	Pin Alternate Functionality / Description				
	Analog	Timers	Communication	Radio	Other
PB10	OPA2_OUTALT #1 BUSDY BUSCX	WTIM0_CC0 #14 WTIM0_CC1 #12 WTIM0_CC2 #10 WTIM0_CDTI0 #6 WTIM0_CDTI1 #4 WTIM0_CDTI2 #2 PCNT1_S0IN #10 PCNT1_S1IN #9 PCNT2_S0IN #10 PCNT2_S1IN #9	US2_TX #13 US2_RX #12 US2_CLK #11 US2_CS #10 US2_CTS #9 US2_RTS #8 US3_TX #14 US3_RX #13 US3_CLK #12 US3_CS #11 US3_CTS #10 US3_RTS #9 I2C1_SDA #10 I2C1_SCL #9		

GPIO Name	Pin Alternate Functionality / Description				
	Analog	Timers	Communication	Radio	Other
PB11	BUSCY BUSDX OPA2_P	TIM0_CC0 #6 TIM0_CC1 #5 TIM0_CC2 #4 TIM0_CDTI0 #3 TIM0_CDTI1 #2 TIM0_CDTI2 #1 TIM1_CC0 #6 TIM1_CC1 #5 TIM1_CC2 #4 TIM1_CC3 #3 WTIM0_CC0 #15 WTIM0_CC1 #13 WTIM0_CC2 #11 WTIM0_CDTI0 #7 WTIM0_CDTI1 #5 WTIM0_CDTI2 #3 LETIM0_OUT0 #6 LETIM0_OUT1 #5 PCNT0_S0IN #6 PCNT0_S1IN #5	US0_TX #6 US0_RX #5 US0_CLK #4 US0_CS #3 US0_CTS #2 US0_RTS #1 US1_TX #6 US1_RX #5 US1_CLK #4 US1_CS #3 US1_CTS #2 US1_RTS #1 US3_TX #15 US3_RX #14 US3_CLK #13 US3_CS #12 US3_CTS #11 US3_RTS #10 LEU0_TX #6 LEU0_RX #5 I2C0_SDA #6 I2C0_SCL #5	FRC_DCLK #6 FRC_DOUT #5 FRC_DFRAME #4 MODEM_DCLK #6 MODEM_DIN #5 MODEM_DOUT #4 MODEM_ANT0 #3 MODEM_ANT1 #2	PRS_CH6 #6 PRS_CH7 #5 PRS_CH8 #4 PRS_CH9 #3 ACMP0_O #6 ACMP1_O #6

GPIO Name	Pin Alternate Functionality / Description				
	Analog	Timers	Communication	Radio	Other
PB12	BUSDY BUSCX OPA2_OUT	TIM0_CC0 #7 TIM0_CC1 #6 TIM0_CC2 #5 TIM0_CDTI0 #4 TIM0_CDTI1 #3 TIM0_CDTI2 #2 TIM1_CC0 #7 TIM1_CC1 #6 TIM1_CC2 #5 TIM1_CC3 #4 WTIM0_CC0 #16 WTIM0_CC1 #14 WTIM0_CC2 #12 WTIM0_CDTI0 #8 WTIM0_CDTI1 #6 WTIM0_CDTI2 #4 WTIM1_CC0 #0 LETIM0_OUT0 #7 LETIM0_OUT1 #6 PCNT0_S0IN #7 PCNT0_S1IN #6	US0_TX #7 US0_RX #6 US0_CLK #5 US0_CS #4 US0_CTS #3 US0_RTS #2 US1_TX #7 US1_RX #6 US1_CLK #5 US1_CS #4 US1_CTS #3 US1_RTS #2 LEU0_TX #7 LEU0_RX #6 I2C0_SDA #7 I2C0_SCL #6	FRC_DCLK #7 FRC_DOUT #6 FRC_DFRAME #5 MODEM_DCLK #7 MODEM_DIN #6 MODEM_DOUT #5 MODEM_ANT0 #4 MODEM_ANT1 #3	PRS_CH6 #7 PRS_CH7 #6 PRS_CH8 #5 PRS_CH9 #4 ACMP0_O #7 ACMP1_O #7

GPIO Name	Pin Alternate Functionality / Description				
	Analog	Timers	Communication	Radio	Other
PB13	BUSCY BUSDX OPA2_N	TIM0_CC0 #8 TIM0_CC1 #7 TIM0_CC2 #6 TIM0_CDTI0 #5 TIM0_CDTI1 #4 TIM0_CDTI2 #3 TIM1_CC0 #8 TIM1_CC1 #7 TIM1_CC2 #6 TIM1_CC3 #5 WTIM0_CC0 #17 WTIM0_CC1 #15 WTIM0_CC2 #13 WTIM0_CDTI0 #9 WTIM0_CDTI1 #7 WTIM0_CDTI2 #5 WTIM1_CC0 #1 LETIM0_OUT0 #8 LETIM0_OUT1 #7 PCNT0_S0IN #8 PCNT0_S1IN #7	US0_TX #8 US0_RX #7 US0_CLK #6 US0_CS #5 US0_CTS #4 US0_RTS #3 US1_TX #8 US1_RX #7 US1_CLK #6 US1_CS #5 US1_CTS #4 US1_RTS #3 LEU0_TX #8 LEU0_RX #7 I2C0_SDA #8 I2C0_SCL #7	FRC_DCLK #8 FRC_DOUT #7 FRC_DFRAME #6 MODEM_DCLK #8 MODEM_DIN #7 MODEM_DOUT #6 MODEM_ANT0 #5 MODEM_ANT1 #4	CMU_CLKI0 #0 PRS_CH6 #8 PRS_CH7 #7 PRS_CH8 #6 PRS_CH9 #5 ACMP0_O #8 ACMP1_O #8 DBG_SWO #1 GPIO_EM4WU9

GPIO Name	Pin Alternate Functionality / Description				
	Analog	Timers	Communication	Radio	Other
PB14	BUSDY BUSCX LFXTAL_N	TIM0_CC0 #9 TIM0_CC1 #8 TIM0_CC2 #7 TIM0_CDTI0 #6 TIM0_CDTI1 #5 TIM0_CDTI2 #4 TIM1_CC0 #9 TIM1_CC1 #8 TIM1_CC2 #7 TIM1_CC3 #6 WTIM0_CC0 #18 WTIM0_CC1 #16 WTIM0_CC2 #14 WTIM0_CDTI0 #10 WTIM0_CDTI1 #8 WTIM0_CDTI2 #6 WTIM1_CC0 #2 WTIM1_CC1 #0 LETIM0_OUT0 #9 LETIM0_OUT1 #8 PCNT0_S0IN #9 PCNT0_S1IN #8	US0_TX #9 US0_RX #8 US0_CLK #7 US0_CS #6 US0_CTS #5 US0_RTS #4 US1_TX #9 US1_RX #8 US1_CLK #7 US1_CS #6 US1_CTS #5 US1_RTS #4 LEU0_TX #9 LEU0_RX #8 I2C0_SDA #9 I2C0_SCL #8	FRC_DCLK #9 FRC_DOUT #8 FRC_DFRAME #7 MODEM_DCLK #9 MODEM_DIN #8 MODEM_DOUT #7 MODEM_ANT0 #6 MODEM_ANT1 #5	CMU_CLK1 #1 PRS_CH6 #9 PRS_CH7 #8 PRS_CH8 #7 PRS_CH9 #6 ACMP0_O #9 ACMP1_O #9

GPIO Name	Pin Alternate Functionality / Description				
	Analog	Timers	Communication	Radio	Other
PB15	BUSCY BUSDX LFXTAL_P	TIM0_CC0 #10 TIM0_CC1 #9 TIM0_CC2 #8 TIM0_CDTI0 #7 TIM0_CDTI1 #6 TIM0_CDTI2 #5 TIM1_CC0 #10 TIM1_CC1 #9 TIM1_CC2 #8 TIM1_CC3 #7 WTIM0_CC0 #19 WTIM0_CC1 #17 WTIM0_CC2 #15 WTIM0_CDTI0 #11 WTIM0_CDTI1 #9 WTIM0_CDTI2 #7 WTIM1_CC0 #3 WTIM1_CC1 #1 LETIM0_OUT0 #10 LETIM0_OUT1 #9 PCNT0_S0IN #10 PCNT0_S1IN #9	US0_TX #10 US0_RX #9 US0_CLK #8 US0_CS #7 US0_CTS #6 US0_RTS #5 US1_TX #10 US1_RX #9 US1_CLK #8 US1_CS #7 US1_CTS #6 US1_RTS #5 LEU0_TX #10 LEU0_RX #9 I2C0_SDA #10 I2C0_SCL #9	FRC_DCLK #10 FRC_DOUT #9 FRC_DFRAME #8 MODEM_DCLK #10 MODEM_DIN #9 MODEM_DOUT #8 MODEM_ANT0 #7 MODEM_ANT1 #6	CMU_CLK0 #1 PRS_CH6 #10 PRS_CH7 #9 PRS_CH8 #8 PRS_CH9 #7 ACMP0_O #10 ACMP1_O #10
PC0	BUSBY BUSAX	WTIM0_CC0 #20 WTIM0_CC1 #18 WTIM0_CC2 #16 WTIM0_CDTI0 #12 WTIM0_CDTI1 #10 WTIM0_CDTI2 #8 WTIM1_CC0 #4 WTIM1_CC1 #2 WTIM1_CC2 #0 PCNT1_S0IN #13 PCNT1_S1IN #12 PCNT2_S0IN #13 PCNT2_S1IN #12	US3_TX #18 US3_RX #17 US3_CLK #16 US3_CS #15 US3_CTS #14 US3_RTS #13 I2C1_SDA #13 I2C1_SCL #12		

GPIO Name	Pin Alternate Functionality / Description				
	Analog	Timers	Communication	Radio	Other
PC1	BUSAY BUSBX	WTIM0_CC0 #21 WTIM0_CC1 #19 WTIM0_CC2 #17 WTIM0_CDTI0 #13 WTIM0_CDTI1 #11 WTIM0_CDTI2 #9 WTIM1_CC0 #5 WTIM1_CC1 #3 WTIM1_CC2 #1 PCNT1_S0IN #14 PCNT1_S1IN #13 PCNT2_S0IN #14 PCNT2_S1IN #13	US3_TX #19 US3_RX #18 US3_CLK #17 US3_CS #16 US3_CTS #15 US3_RTS #14 I2C1_SDA #14 I2C1_SCL #13		
PC2	BUSBY BUSAX	WTIM0_CC0 #22 WTIM0_CC1 #20 WTIM0_CC2 #18 WTIM0_CDTI0 #14 WTIM0_CDTI1 #12 WTIM0_CDTI2 #10 WTIM1_CC0 #6 WTIM1_CC1 #4 WTIM1_CC2 #2 WTIM1_CC3 #0 PCNT1_S0IN #15 PCNT1_S1IN #14 PCNT2_S0IN #15 PCNT2_S1IN #14	US3_TX #20 US3_RX #19 US3_CLK #18 US3_CS #17 US3_CTS #16 US3_RTS #15 I2C1_SDA #15 I2C1_SCL #14		

GPIO Name	Pin Alternate Functionality / Description				
	Analog	Timers	Communication	Radio	Other
PC3	BUSAY BUSBX	WTIM0_CC0 #23 WTIM0_CC1 #21 WTIM0_CC2 #19 WTIM0_CDTI0 #15 WTIM0_CDTI1 #13 WTIM0_CDTI2 #11 WTIM1_CC0 #7 WTIM1_CC1 #5 WTIM1_CC2 #3 WTIM1_CC3 #1 PCNT1_S0IN #16 PCNT1_S1IN #15 PCNT2_S0IN #16 PCNT2_S1IN #15	US3_TX #21 US3_RX #20 US3_CLK #19 US3_CS #18 US3_CTS #17 US3_RTS #16 I2C1_SDA #16 I2C1_SCL #15		
PC4	BUSBY BUSAX	WTIM0_CC0 #24 WTIM0_CC1 #22 WTIM0_CC2 #20 WTIM0_CDTI0 #16 WTIM0_CDTI1 #14 WTIM0_CDTI2 #12 WTIM1_CC0 #8 WTIM1_CC1 #6 WTIM1_CC2 #4 WTIM1_CC3 #2 PCNT1_S0IN #17 PCNT1_S1IN #16 PCNT2_S0IN #17 PCNT2_S1IN #16	US3_TX #22 US3_RX #21 US3_CLK #20 US3_CS #19 US3_CTS #18 US3_RTS #17 I2C1_SDA #17 I2C1_SCL #16		

GPIO Name	Pin Alternate Functionality / Description				
	Analog	Timers	Communication	Radio	Other
PC5	BUSAY BUSBX	WTIM0_CC0 #25 WTIM0_CC1 #23 WTIM0_CC2 #21 WTIM0_CDTI0 #17 WTIM0_CDTI1 #15 WTIM0_CDTI2 #13 WTIM1_CC0 #9 WTIM1_CC1 #7 WTIM1_CC2 #5 WTIM1_CC3 #3 PCNT1_S0IN #18 PCNT1_S1IN #17 PCNT2_S0IN #18 PCNT2_S1IN #17	US3_TX #23 US3_RX #22 US3_CLK #21 US3_CS #20 US3_CTS #19 US3_RTS #18 I2C1_SDA #18 I2C1_SCL #17		

GPIO Name	Pin Alternate Functionality / Description				
	Analog	Timers	Communication	Radio	Other
PC6	BUSBY BUSAX	TIM0_CC0 #11 TIM0_CC1 #10 TIM0_CC2 #9 TIM0_CDTI0 #8 TIM0_CDTI1 #7 TIM0_CDTI2 #6 TIM1_CC0 #11 TIM1_CC1 #10 TIM1_CC2 #9 TIM1_CC3 #8 WTIM0_CC0 #26 WTIM0_CC1 #24 WTIM0_CC2 #22 WTIM0_CDTI0 #18 WTIM0_CDTI1 #16 WTIM0_CDTI2 #14 WTIM1_CC0 #10 WTIM1_CC1 #8 WTIM1_CC2 #6 WTIM1_CC3 #4 LETIM0_OUT0 #11 LETIM0_OUT1 #10 PCNT0_S0IN #11 PCNT0_S1IN #10	US0_TX #11 US0_RX #10 US0_CLK #9 US0_CS #8 US0_CTS #7 US0_RTS #6 US1_TX #11 US1_RX #10 US1_CLK #9 US1_CS #8 US1_CTS #7 US1_RTS #6 LEU0_TX #11 LEU0_RX #10 I2C0_SDA #11 I2C0_SCL #10	FRC_DCLK #11 FRC_DOUT #10 FRC_DFRAME #9 MODEM_DCLK #11 MODEM_DIN #10 MODEM_DOUT #9 MODEM_ANT0 #8 MODEM_ANT1 #7	CMU_CLK0 #2 CMU_CLKI0 #2 PRS_CH0 #8 PRS_CH9 #11 PRS_CH10 #0 PRS_CH11 #5 ACMP0_O #11 ACMP1_O #11 ETM_TCLK #3

GPIO Name	Pin Alternate Functionality / Description				
	Analog	Timers	Communication	Radio	Other
PC7	BUSAY BUSBX	TIM0_CC0 #12 TIM0_CC1 #11 TIM0_CC2 #10 TIM0_CDTI0 #9 TIM0_CDTI1 #8 TIM0_CDTI2 #7 TIM1_CC0 #12 TIM1_CC1 #11 TIM1_CC2 #10 TIM1_CC3 #9 WTIM0_CC0 #27 WTIM0_CC1 #25 WTIM0_CC2 #23 WTIM0_CDTI0 #19 WTIM0_CDTI1 #17 WTIM0_CDTI2 #15 WTIM1_CC0 #11 WTIM1_CC1 #9 WTIM1_CC2 #7 WTIM1_CC3 #5 LETIM0_OUT0 #12 LETIM0_OUT1 #11 PCNT0_S0IN #12 PCNT0_S1IN #11	US0_TX #12 US0_RX #11 US0_CLK #10 US0_CS #9 US0_CTS #8 US0_RTS #7 US1_TX #12 US1_RX #11 US1_CLK #10 US1_CS #9 US1_CTS #8 US1_RTS #7 LEU0_TX #12 LEU0_RX #11 I2C0_SDA #12 I2C0_SCL #11	FRC_DCLK #12 FRC_DOUT #11 FRC_DFRAME #10 MODEM_DCLK #12 MODEM_DIN #11 MODEM_DOUT #10 MODEM_ANT0 #9 MODEM_ANT1 #8	CMU_CLK1 #2 PRS_CH0 #9 PRS_CH9 #12 PRS_CH10 #1 PRS_CH11 #0 ACMP0_O #12 ACMP1_O #12 ETM_TD0 #3

GPIO Name	Pin Alternate Functionality / Description				
	Analog	Timers	Communication	Radio	Other
PC8	BUSBY BUSAX	TIM0_CC0 #13 TIM0_CC1 #12 TIM0_CC2 #11 TIM0_CDTI0 #10 TIM0_CDTI1 #9 TIM0_CDTI2 #8 TIM1_CC0 #13 TIM1_CC1 #12 TIM1_CC2 #11 TIM1_CC3 #10 WTIM0_CC0 #28 WTIM0_CC1 #26 WTIM0_CC2 #24 WTIM0_CDTI0 #20 WTIM0_CDTI1 #18 WTIM0_CDTI2 #16 WTIM1_CC0 #12 WTIM1_CC1 #10 WTIM1_CC2 #8 WTIM1_CC3 #6 LETIM0_OUT0 #13 LETIM0_OUT1 #12 PCNT0_S0IN #13 PCNT0_S1IN #12	US0_TX #13 US0_RX #12 US0_CLK #11 US0_CS #10 US0_CTS #9 US0_RTS #8 US1_TX #13 US1_RX #12 US1_CLK #11 US1_CS #10 US1_CTS #9 US1_RTS #8 LEU0_TX #13 LEU0_RX #12 I2C0_SDA #13 I2C0_SCL #12	FRC_DCLK #13 FRC_DOUT #12 FRC_DFRAME #11 MODEM_DCLK #13 MODEM_DIN #12 MODEM_DOUT #11 MODEM_ANT0 #10 MODEM_ANT1 #9	PRS_CH0 #10 PRS_CH9 #13 PRS_CH10 #2 PRS_CH11 #1 ACMP0_O #13 ACMP1_O #13 ETM_TD1 #3

GPIO Name	Pin Alternate Functionality / Description				
	Analog	Timers	Communication	Radio	Other
PC9	BUSAY BUSBX	TIM0_CC0 #14 TIM0_CC1 #13 TIM0_CC2 #12 TIM0_CDTI0 #11 TIM0_CDTI1 #10 TIM0_CDTI2 #9 TIM1_CC0 #14 TIM1_CC1 #13 TIM1_CC2 #12 TIM1_CC3 #11 WTIM0_CC0 #29 WTIM0_CC1 #27 WTIM0_CC2 #25 WTIM0_CDTI0 #21 WTIM0_CDTI1 #19 WTIM0_CDTI2 #17 WTIM1_CC0 #13 WTIM1_CC1 #11 WTIM1_CC2 #9 WTIM1_CC3 #7 LETIM0_OUT0 #14 LETIM0_OUT1 #13 PCNT0_S0IN #14 PCNT0_S1IN #13	US0_TX #14 US0_RX #13 US0_CLK #12 US0_CS #11 US0_CTS #10 US0_RTS #9 US1_TX #14 US1_RX #13 US1_CLK #12 US1_CS #11 US1_CTS #10 US1_RTS #9 LEU0_TX #14 LEU0_RX #13 I2C0_SDA #14 I2C0_SCL #13	FRC_DCLK #14 FRC_DOUT #13 FRC_DFRAME #12 MODEM_DCLK #14 MODEM_DIN #13 MODEM_DOUT #12 MODEM_ANT0 #11 MODEM_ANT1 #10	PRS_CH0 #11 PRS_CH9 #14 PRS_CH10 #3 PRS_CH11 #2 ACMP0_O #14 ACMP1_O #14 ETM_TD2 #3

GPIO Name	Pin Alternate Functionality / Description				
	Analog	Timers	Communication	Radio	Other
PC10	BUSBY BUSAX	TIM0_CC0 #15 TIM0_CC1 #14 TIM0_CC2 #13 TIM0_CDTI0 #12 TIM0_CDTI1 #11 TIM0_CDTI2 #10 TIM1_CC0 #15 TIM1_CC1 #14 TIM1_CC2 #13 TIM1_CC3 #12 WTIM0_CC0 #30 WTIM0_CC1 #28 WTIM0_CC2 #26 WTIM0_CDTI0 #22 WTIM0_CDTI1 #20 WTIM0_CDTI2 #18 WTIM1_CC0 #14 WTIM1_CC1 #12 WTIM1_CC2 #10 WTIM1_CC3 #8 LETIM0_OUT0 #15 LETIM0_OUT1 #14 PCNT0_S0IN #15 PCNT0_S1IN #14 PCNT2_S0IN #19 PCNT2_S1IN #18	US0_TX #15 US0_RX #14 US0_CLK #13 US0_CS #12 US0_CTS #11 US0_RTS #10 US1_TX #15 US1_RX #14 US1_CLK #13 US1_CS #12 US1_CTS #11 US1_RTS #10 LEU0_TX #15 LEU0_RX #14 I2C0_SDA #15 I2C0_SCL #14 I2C1_SDA #19 I2C1_SCL #18	FRC_DCLK #15 FRC_DOUT #14 FRC_DFRAME #13 MODEM_DCLK #15 MODEM_DIN #14 MODEM_DOUT #13 MODEM_ANT0 #12 MODEM_ANT1 #11	CMU_CLK1 #3 PRS_CH0 #12 PRS_CH9 #15 PRS_CH10 #4 PRS_CH11 #3 ACMP0_O #15 ACMP1_O #15 ETM_TD3 #3 GPIO_EM4WU12

GPIO Name	Pin Alternate Functionality / Description				
	Analog	Timers	Communication	Radio	Other
PC11	BUSAY BUSBX	TIM0_CC0 #16 TIM0_CC1 #15 TIM0_CC2 #14 TIM0_CDTI0 #13 TIM0_CDTI1 #12 TIM0_CDTI2 #11 TIM1_CC0 #16 TIM1_CC1 #15 TIM1_CC2 #14 TIM1_CC3 #13 WTIM0_CC0 #31 WTIM0_CC1 #29 WTIM0_CC2 #27 WTIM0_CDTI0 #23 WTIM0_CDTI1 #21 WTIM0_CDTI2 #19 WTIM1_CC0 #15 WTIM1_CC1 #13 WTIM1_CC2 #11 WTIM1_CC3 #9 LETIM0_OUT0 #16 LETIM0_OUT1 #15 PCNT0_S0IN #16 PCNT0_S1IN #15 PCNT2_S0IN #20 PCNT2_S1IN #19	US0_TX #16 US0_RX #15 US0_CLK #14 US0_CS #13 US0_CTS #12 US0_RTS #11 US1_TX #16 US1_RX #15 US1_CLK #14 US1_CS #13 US1_CTS #12 US1_RTS #11 LEU0_TX #16 LEU0_RX #15 I2C0_SDA #16 I2C0_SCL #15 I2C1_SDA #20 I2C1_SCL #19	FRC_DCLK #16 FRC_DOUT #15 FRC_DFRAME #14 MODEM_DCLK #16 MODEM_DIN #15 MODEM_DOUT #14 MODEM_ANT0 #13 MODEM_ANT1 #12	CMU_CLK0 #3 PRS_CH0 #13 PRS_CH9 #16 PRS_CH10 #5 PRS_CH11 #4 ACMP0_O #16 ACMP1_O #16 DBG_SWO #3
PD8	BUSDY BUSCX	WTIM0_CC1 #30 WTIM0_CC2 #28 WTIM0_CDTI0 #24 WTIM0_CDTI1 #22 WTIM0_CDTI2 #20 WTIM1_CC0 #16 WTIM1_CC1 #14 WTIM1_CC2 #12 WTIM1_CC3 #10	US3_TX #0 US3_RX #31 US3_CLK #30 US3_CS #29 US3_CTS #28 US3_RTS #27		LES_CH0

GPIO Name	Pin Alternate Functionality / Description				
	Analog	Timers	Communication	Radio	Other
PD9	BUSCY BUSDX	TIM0_CC0 #17 TIM0_CC1 #16 TIM0_CC2 #15 TIM0_CDTI0 #14 TIM0_CDTI1 #13 TIM0_CDTI2 #12 TIM1_CC0 #17 TIM1_CC1 #16 TIM1_CC2 #15 TIM1_CC3 #14 WTIM0_CC1 #31 WTIM0_CC2 #29 WTIM0_CDTI0 #25 WTIM0_CDTI1 #23 WTIM0_CDTI2 #21 WTIM1_CC0 #17 WTIM1_CC1 #15 WTIM1_CC2 #13 WTIM1_CC3 #11 LETIM0_OUT0 #17 LETIM0_OUT1 #16 PCNT0_S0IN #17 PCNT0_S1IN #16	US0_TX #17 US0_RX #16 US0_CLK #15 US0_CS #14 US0_CTS #13 US0_RTS #12 US1_TX #17 US1_RX #16 US1_CLK #15 US1_CS #14 US1_CTS #13 US1_RTS #12 US3_TX #1 US3_RX #0 US3_CLK #31 US3_CS #30 US3_CTS #29 US3_RTS #28 LEU0_TX #17 LEU0_RX #16 I2C0_SDA #17 I2C0_SCL #16	FRC_DCLK #17 FRC_DOUT #16 FRC_DFRAME #15 MODEM_DCLK #17 MODEM_DIN #16 MODEM_DOUT #15 MODEM_ANT0 #14 MODEM_ANT1 #13	CMU_CLK0 #4 PRS_CH3 #8 PRS_CH4 #0 PRS_CH5 #6 PRS_CH6 #11 ACMP0_O #17 ACMP1_O #17 LES_CH1

GPIO Name	Pin Alternate Functionality / Description				
	Analog	Timers	Communication	Radio	Other
PD10	BUSDY BUSCX	TIM0_CC0 #18 TIM0_CC1 #17 TIM0_CC2 #16 TIM0_CDTI0 #15 TIM0_CDTI1 #14 TIM0_CDTI2 #13 TIM1_CC0 #18 TIM1_CC1 #17 TIM1_CC2 #16 TIM1_CC3 #15 WTIM0_CC2 #30 WTIM0_CDTI0 #26 WTIM0_CDTI1 #24 WTIM0_CDTI2 #22 WTIM1_CC0 #18 WTIM1_CC1 #16 WTIM1_CC2 #14 WTIM1_CC3 #12 LETIM0_OUT0 #18 LETIM0_OUT1 #17 PCNT0_S0IN #18 PCNT0_S1IN #17	US0_TX #18 US0_RX #17 US0_CLK #16 US0_CS #15 US0_CTS #14 US0_RTS #13 US1_TX #18 US1_RX #17 US1_CLK #16 US1_CS #15 US1_CTS #14 US1_RTS #13 US3_TX #2 US3_RX #1 US3_CLK #0 US3_CS #31 US3_CTS #30 US3_RTS #29 LEU0_TX #18 LEU0_RX #17 I2C0_SDA #18 I2C0_SCL #17	FRC_DCLK #18 FRC_DOUT #17 FRC_DFRAME #16 MODEM_DCLK #18 MODEM_DIN #17 MODEM_DOUT #16 MODEM_ANT0 #15 MODEM_ANT1 #14	CMU_CLK1 #4 PRS_CH3 #9 PRS_CH4 #1 PRS_CH5 #0 PRS_CH6 #12 ACMP0_O #18 ACMP1_O #18 LES_CH2

GPIO Name	Pin Alternate Functionality / Description				
	Analog	Timers	Communication	Radio	Other
PD11	BUSCY BUSDX	TIM0_CC0 #19 TIM0_CC1 #18 TIM0_CC2 #17 TIM0_CDTI0 #16 TIM0_CDTI1 #15 TIM0_CDTI2 #14 TIM1_CC0 #19 TIM1_CC1 #18 TIM1_CC2 #17 TIM1_CC3 #16 WTIM0_CC2 #31 WTIM0_CDTI0 #27 WTIM0_CDTI1 #25 WTIM0_CDTI2 #23 WTIM1_CC0 #19 WTIM1_CC1 #17 WTIM1_CC2 #15 WTIM1_CC3 #13 LETIM0_OUT0 #19 LETIM0_OUT1 #18 PCNT0_S0IN #19 PCNT0_S1IN #18	US0_TX #19 US0_RX #18 US0_CLK #17 US0_CS #16 US0_CTS #15 US0_RTS #14 US1_TX #19 US1_RX #18 US1_CLK #17 US1_CS #16 US1_CTS #15 US1_RTS #14 US3_TX #3 US3_RX #2 US3_CLK #1 US3_CS #0 US3_CTS #31 US3_RTS #30 LEU0_TX #19 LEU0_RX #18 I2C0_SDA #19 I2C0_SCL #18	FRC_DCLK #19 FRC_DOUT #18 FRC_DFRAME #17 MODEM_DCLK #19 MODEM_DIN #18 MODEM_DOUT #17 MODEM_ANT0 #16 MODEM_ANT1 #15	PRS_CH3 #10 PRS_CH4 #2 PRS_CH5 #1 PRS_CH6 #13 ACMP0_O #19 ACMP1_O #19 LES_CH3

GPIO Name	Pin Alternate Functionality / Description				
	Analog	Timers	Communication	Radio	Other
PD12	VDAC0_OUT1ALT / OPA1_OUTALT #0 BUSDY BUSCX	TIM0_CC0 #20 TIM0_CC1 #19 TIM0_CC2 #18 TIM0_CDTI0 #17 TIM0_CDTI1 #16 TIM0_CDTI2 #15 TIM1_CC0 #20 TIM1_CC1 #19 TIM1_CC2 #18 TIM1_CC3 #17 WTIM0_CDTI0 #28 WTIM0_CDTI1 #26 WTIM0_CDTI2 #24 WTIM1_CC0 #20 WTIM1_CC1 #18 WTIM1_CC2 #16 WTIM1_CC3 #14 LETIM0_OUT0 #20 LETIM0_OUT1 #19 PCNT0_S0IN #20 PCNT0_S1IN #19	US0_TX #20 US0_RX #19 US0_CLK #18 US0_CS #17 US0_CTS #16 US0_RTS #15 US1_TX #20 US1_RX #19 US1_CLK #18 US1_CS #17 US1_CTS #16 US1_RTS #15 US3_TX #4 US3_RX #3 US3_CLK #2 US3_CS #1 US3_CTS #0 US3_RTS #31 LEU0_TX #20 LEU0_RX #19 I2C0_SDA #20 I2C0_SCL #19	FRC_DCLK #20 FRC_DOUT #19 FRC_DFRAME #18 MODEM_DCLK #20 MODEM_DIN #19 MODEM_DOUT #18 MODEM_ANT0 #17 MODEM_ANT1 #16	PRS_CH3 #11 PRS_CH4 #3 PRS_CH5 #2 PRS_CH6 #14 ACMP0_O #20 ACMP1_O #20 LES_CH4

GPIO Name	Pin Alternate Functionality / Description				
	Analog	Timers	Communication	Radio	Other
PD13	VDAC0_OUT0ALT / OPA0_OUTALT #1 BUSCY BUSDX OPA1_P	TIM0_CC0 #21 TIM0_CC1 #20 TIM0_CC2 #19 TIM0_CDTI0 #18 TIM0_CDTI1 #17 TIM0_CDTI2 #16 TIM1_CC0 #21 TIM1_CC1 #20 TIM1_CC2 #19 TIM1_CC3 #18 WTIM0_CDTI0 #29 WTIM0_CDTI1 #27 WTIM0_CDTI2 #25 WTIM1_CC0 #21 WTIM1_CC1 #19 WTIM1_CC2 #17 WTIM1_CC3 #15 LETIM0_OUT0 #21 LETIM0_OUT1 #20 PCNT0_S0IN #21 PCNT0_S1IN #20	US0_TX #21 US0_RX #20 US0_CLK #19 US0_CS #18 US0_CTS #17 US0_RTS #16 US1_TX #21 US1_RX #20 US1_CLK #19 US1_CS #18 US1_CTS #17 US1_RTS #16 US3_TX #5 US3_RX #4 US3_CLK #3 US3_CS #2 US3_CTS #1 US3_RTS #0 LEU0_TX #21 LEU0_RX #20 I2C0_SDA #21 I2C0_SCL #20	FRC_DCLK #21 FRC_DOUT #20 FRC_DFRAME #19 MODEM_DCLK #21 MODEM_DIN #20 MODEM_DOUT #19 MODEM_ANT0 #18 MODEM_ANT1 #17	PRS_CH3 #12 PRS_CH4 #4 PRS_CH5 #3 PRS_CH6 #15 ACMP0_O #21 ACMP1_O #21 LES_CH5

GPIO Name	Pin Alternate Functionality / Description				
	Analog	Timers	Communication	Radio	Other
PD14	BUSDY BUSCX VDAC0_OUT1 / OPA1_OUT	TIM0_CC0 #22 TIM0_CC1 #21 TIM0_CC2 #20 TIM0_CDTI0 #19 TIM0_CDTI1 #18 TIM0_CDTI2 #17 TIM1_CC0 #22 TIM1_CC1 #21 TIM1_CC2 #20 TIM1_CC3 #19 WTIM0_CDTI0 #30 WTIM0_CDTI1 #28 WTIM0_CDTI2 #26 WTIM1_CC0 #22 WTIM1_CC1 #20 WTIM1_CC2 #18 WTIM1_CC3 #16 LETIM0_OUT0 #22 LETIM0_OUT1 #21 PCNT0_S0IN #22 PCNT0_S1IN #21	US0_TX #22 US0_RX #21 US0_CLK #20 US0_CS #19 US0_CTS #18 US0_RTS #17 US1_TX #22 US1_RX #21 US1_CLK #20 US1_CS #19 US1_CTS #18 US1_RTS #17 US3_TX #6 US3_RX #5 US3_CLK #4 US3_CS #3 US3_CTS #2 US3_RTS #1 LEU0_TX #22 LEU0_RX #21 I2C0_SDA #22 I2C0_SCL #21	FRC_DCLK #22 FRC_DOUT #21 FRC_DFRAME #20 MODEM_DCLK #22 MODEM_DIN #21 MODEM_DOUT #20 MODEM_ANT0 #19 MODEM_ANT1 #18	CMU_CLK0 #5 PRS_CH3 #13 PRS_CH4 #5 PRS_CH5 #4 PRS_CH6 #16 ACMP0_O #22 ACMP1_O #22 LES_CH6 GPIO_EM4WU4

GPIO Name	Pin Alternate Functionality / Description				
	Analog	Timers	Communication	Radio	Other
PD15	VDAC0_OUT0ALT / OPA0_OUTALT #2 BUSCY BUSDX OPA1_N	TIM0_CC0 #23 TIM0_CC1 #22 TIM0_CC2 #21 TIM0_CDTI0 #20 TIM0_CDTI1 #19 TIM0_CDTI2 #18 TIM1_CC0 #23 TIM1_CC1 #22 TIM1_CC2 #21 TIM1_CC3 #20 WTIM0_CDTI0 #31 WTIM0_CDTI1 #29 WTIM0_CDTI2 #27 WTIM1_CC0 #23 WTIM1_CC1 #21 WTIM1_CC2 #19 WTIM1_CC3 #17 LETIM0_OUT0 #23 LETIM0_OUT1 #22 PCNT0_S0IN #23 PCNT0_S1IN #22	US0_TX #23 US0_RX #22 US0_CLK #21 US0_CS #20 US0_CTS #19 US0_RTS #18 US1_TX #23 US1_RX #22 US1_CLK #21 US1_CS #20 US1_CTS #19 US1_RTS #18 US3_TX #7 US3_RX #6 US3_CLK #5 US3_CS #4 US3_CTS #3 US3_RTS #2 LEU0_TX #23 LEU0_RX #22 I2C0_SDA #23 I2C0_SCL #22	FRC_DCLK #23 FRC_DOUT #22 FRC_DFRAME #21 MODEM_DCLK #23 MODEM_DIN #22 MODEM_DOUT #21 MODEM_ANT0 #20 MODEM_ANT1 #19	CMU_CLK1 #5 PRS_CH3 #14 PRS_CH4 #6 PRS_CH5 #5 PRS_CH6 #17 ACMP0_O #23 ACMP1_O #23 LES_CH7 DBG_SWO #2

GPIO Name	Pin Alternate Functionality / Description				
	Analog	Timers	Communication	Radio	Other
PF0	BUSBY BUSAX	TIM0_CC0 #24 TIM0_CC1 #23 TIM0_CC2 #22 TIM0_CDTI0 #21 TIM0_CDTI1 #20 TIM0_CDTI2 #19 TIM1_CC0 #24 TIM1_CC1 #23 TIM1_CC2 #22 TIM1_CC3 #21 WTIM0_CDTI1 #30 WTIM0_CDTI2 #28 WTIM1_CC0 #24 WTIM1_CC1 #22 WTIM1_CC2 #20 WTIM1_CC3 #18 LETIM0_OUT0 #24 LETIM0_OUT1 #23 PCNT0_S0IN #24 PCNT0_S1IN #23	US0_TX #24 US0_RX #23 US0_CLK #22 US0_CS #21 US0_CTS #20 US0_RTS #19 US1_TX #24 US1_RX #23 US1_CLK #22 US1_CS #21 US1_CTS #20 US1_RTS #19 US2_TX #14 US2_RX #13 US2_CLK #12 US2_CS #11 US2_CTS #10 US2_RTS #9 LEU0_TX #24 LEU0_RX #23 I2C0_SDA #24 I2C0_SCL #23	FRC_DCLK #24 FRC_DOUT #23 FRC_DFRAME #22 MODEM_DCLK #24 MODEM_DIN #23 MODEM_DOUT #22 MODEM_ANT0 #21 MODEM_ANT1 #20	PRS_CH0 #0 PRS_CH1 #7 PRS_CH2 #6 PRS_CH3 #5 ACMP0_O #24 ACMP1_O #24 DBG_SWCLKTCK BOOT_TX

GPIO Name	Pin Alternate Functionality / Description				
	Analog	Timers	Communication	Radio	Other
PF1	BUSAY BUSBX	TIM0_CC0 #25 TIM0_CC1 #24 TIM0_CC2 #23 TIM0_CDTI0 #22 TIM0_CDTI1 #21 TIM0_CDTI2 #20 TIM1_CC0 #25 TIM1_CC1 #24 TIM1_CC2 #23 TIM1_CC3 #22 WTIM0_CDTI1 #31 WTIM0_CDTI2 #29 WTIM1_CC0 #25 WTIM1_CC1 #23 WTIM1_CC2 #21 WTIM1_CC3 #19 LETIM0_OUT0 #25 LETIM0_OUT1 #24 PCNT0_S0IN #25 PCNT0_S1IN #24	US0_TX #25 US0_RX #24 US0_CLK #23 US0_CS #22 US0_CTS #21 US0_RTS #20 US1_TX #25 US1_RX #24 US1_CLK #23 US1_CS #22 US1_CTS #21 US1_RTS #20 US2_TX #15 US2_RX #14 US2_CLK #13 US2_CS #12 US2_CTS #11 US2_RTS #10 LEU0_TX #25 LEU0_RX #24 I2C0_SDA #25 I2C0_SCL #24	FRC_DCLK #25 FRC_DOUT #24 FRC_DFRAME #23 MODEM_DCLK #25 MODEM_DIN #24 MODEM_DOUT #23 MODEM_ANT0 #22 MODEM_ANT1 #21	PRS_CH0 #1 PRS_CH1 #0 PRS_CH2 #7 PRS_CH3 #6 ACMP0_O #25 ACMP1_O #25 DBG_SWDIOTMS BOOT_RX

GPIO Name	Pin Alternate Functionality / Description				
	Analog	Timers	Communication	Radio	Other
PF2	BUSBY BUSAX	TIM0_CC0 #26 TIM0_CC1 #25 TIM0_CC2 #24 TIM0_CDTI0 #23 TIM0_CDTI1 #22 TIM0_CDTI2 #21 TIM1_CC0 #26 TIM1_CC1 #25 TIM1_CC2 #24 TIM1_CC3 #23 WTIM0_CDTI2 #30 WTIM1_CC0 #26 WTIM1_CC1 #24 WTIM1_CC2 #22 WTIM1_CC3 #20 LETIM0_OUT0 #26 LETIM0_OUT1 #25 PCNT0_S0IN #26 PCNT0_S1IN #25	US0_TX #26 US0_RX #25 US0_CLK #24 US0_CS #23 US0_CTS #22 US0_RTS #21 US1_TX #26 US1_RX #25 US1_CLK #24 US1_CS #23 US1_CTS #22 US1_RTS #21 LEU0_TX #26 LEU0_RX #25 I2C0_SDA #26 I2C0_SCL #25	FRC_DCLK #26 FRC_DOUT #25 FRC_DFRAME #24 MODEM_DCLK #26 MODEM_DIN #25 MODEM_DOUT #24 MODEM_ANT0 #23 MODEM_ANT1 #22	CMU_CLK0 #6 PRS_CH0 #2 PRS_CH1 #1 PRS_CH2 #0 PRS_CH3 #7 ACMP0_O #26 ACMP1_O #26 DBG_TDO DBG_SWO #0 GPIO_EM4WU0

GPIO Name	Pin Alternate Functionality / Description				
	Analog	Timers	Communication	Radio	Other
PF3	BUSAY BUSBX	TIM0_CC0 #27 TIM0_CC1 #26 TIM0_CC2 #25 TIM0_CDTI0 #24 TIM0_CDTI1 #23 TIM0_CDTI2 #22 TIM1_CC0 #27 TIM1_CC1 #26 TIM1_CC2 #25 TIM1_CC3 #24 WTIM0_CDTI2 #31 WTIM1_CC0 #27 WTIM1_CC1 #25 WTIM1_CC2 #23 WTIM1_CC3 #21 LETIM0_OUT0 #27 LETIM0_OUT1 #26 PCNT0_S0IN #27 PCNT0_S1IN #26	US0_TX #27 US0_RX #26 US0_CLK #25 US0_CS #24 US0_CTS #23 US0_RTS #22 US1_TX #27 US1_RX #26 US1_CLK #25 US1_CS #24 US1_CTS #23 US1_RTS #22 US2_TX #16 US2_RX #15 US2_CLK #14 US2_CS #13 US2_CTS #12 US2_RTS #11 LEU0_TX #27 LEU0_RX #26 I2C0_SDA #27 I2C0_SCL #26	FRC_DCLK #27 FRC_DOUT #26 FRC_DFRAME #25 MODEM_DCLK #27 MODEM_DIN #26 MODEM_DOUT #25 MODEM_ANT0 #24 MODEM_ANT1 #23	CMU_CLK1 #6 PRS_CH0 #3 PRS_CH1 #2 PRS_CH2 #1 PRS_CH3 #0 ACMP0_O #27 ACMP1_O #27 DBG_TDI

GPIO Name	Pin Alternate Functionality / Description				
	Analog	Timers	Communication	Radio	Other
PF4	BUSBY BUSAX	TIM0_CC0 #28 TIM0_CC1 #27 TIM0_CC2 #26 TIM0_CDTI0 #25 TIM0_CDTI1 #24 TIM0_CDTI2 #23 TIM1_CC0 #28 TIM1_CC1 #27 TIM1_CC2 #26 TIM1_CC3 #25 WTIM1_CC0 #28 WTIM1_CC1 #26 WTIM1_CC2 #24 WTIM1_CC3 #22 LETIM0_OUT0 #28 LETIM0_OUT1 #27 PCNT0_S0IN #28 PCNT0_S1IN #27	US0_TX #28 US0_RX #27 US0_CLK #26 US0_CS #25 US0_CTS #24 US0_RTS #23 US1_TX #28 US1_RX #27 US1_CLK #26 US1_CS #25 US1_CTS #24 US1_RTS #23 US2_TX #17 US2_RX #16 US2_CLK #15 US2_CS #14 US2_CTS #13 US2_RTS #12 LEU0_TX #28 LEU0_RX #27 I2C0_SDA #28 I2C0_SCL #27	FRC_DCLK #28 FRC_DOUT #27 FRC_DFRAME #26 MODEM_DCLK #28 MODEM_DIN #27 MODEM_DOUT #26 MODEM_ANT0 #25 MODEM_ANT1 #24	PRS_CH0 #4 PRS_CH1 #3 PRS_CH2 #2 PRS_CH3 #1 ACMP0_O #28 ACMP1_O #28

GPIO Name	Pin Alternate Functionality / Description				
	Analog	Timers	Communication	Radio	Other
PF5	BUSAY BUSBX	TIM0_CC0 #29 TIM0_CC1 #28 TIM0_CC2 #27 TIM0_CDTI0 #26 TIM0_CDTI1 #25 TIM0_CDTI2 #24 TIM1_CC0 #29 TIM1_CC1 #28 TIM1_CC2 #27 TIM1_CC3 #26 WTIM1_CC0 #29 WTIM1_CC1 #27 WTIM1_CC2 #25 WTIM1_CC3 #23 LETIM0_OUT0 #29 LETIM0_OUT1 #28 PCNT0_S0IN #29 PCNT0_S1IN #28	US0_TX #29 US0_RX #28 US0_CLK #27 US0_CS #26 US0_CTS #25 US0_RTS #24 US1_TX #29 US1_RX #28 US1_CLK #27 US1_CS #26 US1_CTS #25 US1_RTS #24 US2_TX #18 US2_RX #17 US2_CLK #16 US2_CS #15 US2_CTS #14 US2_RTS #13 LEU0_TX #29 LEU0_RX #28 I2C0_SDA #29 I2C0_SCL #28	FRC_DCLK #29 FRC_DOUT #28 FRC_DFRAME #27 MODEM_DCLK #29 MODEM_DIN #28 MODEM_DOUT #27 MODEM_ANT0 #26 MODEM_ANT1 #25	PRS_CH0 #5 PRS_CH1 #4 PRS_CH2 #3 PRS_CH3 #2 ACMP0_O #29 ACMP1_O #29

GPIO Name	Pin Alternate Functionality / Description				
	Analog	Timers	Communication	Radio	Other
PF6	BUSBY BUSAX	TIM0_CC0 #30 TIM0_CC1 #29 TIM0_CC2 #28 TIM0_CDTI0 #27 TIM0_CDTI1 #26 TIM0_CDTI2 #25 TIM1_CC0 #30 TIM1_CC1 #29 TIM1_CC2 #28 TIM1_CC3 #27 WTIM1_CC0 #30 WTIM1_CC1 #28 WTIM1_CC2 #26 WTIM1_CC3 #24 LETIM0_OUT0 #30 LETIM0_OUT1 #29 PCNT0_S0IN #30 PCNT0_S1IN #29 PCNT1_S0IN #19 PCNT1_S1IN #18	US0_TX #30 US0_RX #29 US0_CLK #28 US0_CS #27 US0_CTS #26 US0_RTS #25 US1_TX #30 US1_RX #29 US1_CLK #28 US1_CS #27 US1_CTS #26 US1_RTS #25 US2_TX #19 US2_RX #18 US2_CLK #17 US2_CS #16 US2_CTS #15 US2_RTS #14 LEU0_TX #30 LEU0_RX #29 I2C0_SDA #30 I2C0_SCL #29	FRC_DCLK #30 FRC_DOUT #29 FRC_DFRAME #28 MODEM_DCLK #30 MODEM_DIN #29 MODEM_DOUT #28 MODEM_ANT0 #27 MODEM_ANT1 #26	CMU_CLK1 #7 PRS_CH0 #6 PRS_CH1 #5 PRS_CH2 #4 PRS_CH3 #3 ACMP0_O #30 ACMP1_O #30

GPIO Name	Pin Alternate Functionality / Description				
	Analog	Timers	Communication	Radio	Other
PF7	BUSAY BUSBX	TIM0_CC0 #31 TIM0_CC1 #30 TIM0_CC2 #29 TIM0_CDTI0 #28 TIM0_CDTI1 #27 TIM0_CDTI2 #26 TIM1_CC0 #31 TIM1_CC1 #30 TIM1_CC2 #29 TIM1_CC3 #28 WTIM1_CC0 #31 WTIM1_CC1 #29 WTIM1_CC2 #27 WTIM1_CC3 #25 LETIM0_OUT0 #31 LETIM0_OUT1 #30 PCNT0_S0IN #31 PCNT0_S1IN #30 PCNT1_S0IN #20 PCNT1_S1IN #19	US0_TX #31 US0_RX #30 US0_CLK #29 US0_CS #28 US0_CTS #27 US0_RTS #26 US1_TX #31 US1_RX #30 US1_CLK #29 US1_CS #28 US1_CTS #27 US1_RTS #26 US2_TX #20 US2_RX #19 US2_CLK #18 US2_CS #17 US2_CTS #16 US2_RTS #15 LEU0_TX #31 LEU0_RX #30 I2C0_SDA #31 I2C0_SCL #30	FRC_DCLK #31 FRC_DOUT #30 FRC_DFRAME #29 MODEM_DCLK #31 MODEM_DIN #30 MODEM_DOUT #29 MODEM_ANT0 #28 MODEM_ANT1 #27	CMU_CLKI0 #1 CMU_CLK0 #7 PRS_CH0 #7 PRS_CH1 #6 PRS_CH2 #5 PRS_CH3 #4 ACMP0_O #31 ACMP1_O #31 GPIO_EM4WU1
PF8	BUSBY BUSAX	WTIM1_CC1 #30 WTIM1_CC2 #28 WTIM1_CC3 #26 PCNT1_S0IN #21 PCNT1_S1IN #20 PCNT2_S0IN #21 PCNT2_S1IN #20	US2_TX #21 US2_RX #20 US2_CLK #19 US2_CS #18 US2_CTS #17 US2_RTS #16 I2C1_SDA #21 I2C1_SCL #20		ETM_TCLK #0

GPIO Name	Pin Alternate Functionality / Description				
	Analog	Timers	Communication	Radio	Other
PF9	BUSAY BUSBX	WTIM1_CC1 #31 WTIM1_CC2 #29 WTIM1_CC3 #27 PCNT1_S0IN #22 PCNT1_S1IN #21 PCNT2_S0IN #22 PCNT2_S1IN #21	US2_TX #22 US2_RX #21 US2_CLK #20 US2_CS #19 US2_CTS #18 US2_RTS #17 I2C1_SDA #22 I2C1_SCL #21		ETM_TD0 #0
PF10	BUSBY BUSAX	WTIM1_CC2 #30 WTIM1_CC3 #28 PCNT1_S0IN #23 PCNT1_S1IN #22 PCNT2_S0IN #23 PCNT2_S1IN #22	US2_TX #23 US2_RX #22 US2_CLK #21 US2_CS #20 US2_CTS #19 US2_RTS #18 I2C1_SDA #23 I2C1_SCL #22		ETM_TD1 #0
PF11	BUSAY BUSBX	WTIM1_CC2 #31 WTIM1_CC3 #29 PCNT1_S0IN #24 PCNT1_S1IN #23 PCNT2_S0IN #24 PCNT2_S1IN #23	US2_TX #24 US2_RX #23 US2_CLK #22 US2_CS #21 US2_CTS #20 US2_RTS #19 US3_TX #24 US3_RX #23 US3_CLK #22 US3_CS #21 US3_CTS #20 US3_RTS #19 I2C1_SDA #24 I2C1_SCL #23		ETM_TD2 #0

GPIO Name	Pin Alternate Functionality / Description				
	Analog	Timers	Communication	Radio	Other
PF12	BUSBY BUSAX	WTIM1_CC3 #30 PCNT1_S0IN #25 PCNT1_S1IN #24 PCNT2_S0IN #25 PCNT2_S1IN #24	US2_TX #25 US2_RX #24 US2_CLK #23 US2_CS #22 US2_CTS #21 US2_RTS #20 US3_TX #25 US3_RX #24 US3_CLK #23 US3_CS #22 US3_CTS #21 US3_RTS #20 I2C1_SDA #25 I2C1_SCL #24		ETM_TD3 #0
PF13	BUSAY BUSBX	WTIM1_CC3 #31 PCNT1_S0IN #26 PCNT1_S1IN #25 PCNT2_S0IN #26 PCNT2_S1IN #25	US2_TX #26 US2_RX #25 US2_CLK #24 US2_CS #23 US2_CTS #22 US2_RTS #21 US3_TX #26 US3_RX #25 US3_CLK #24 US3_CS #23 US3_CTS #22 US3_RTS #21 I2C1_SDA #26 I2C1_SCL #25		

GPIO Name	Pin Alternate Functionality / Description				
	Analog	Timers	Communication	Radio	Other
PF14	BUSBY BUSAX	PCNT1_S0IN #27 PCNT1_S1IN #26 PCNT2_S0IN #27 PCNT2_S1IN #26	US2_TX #27 US2_RX #26 US2_CLK #25 US2_CS #24 US2_CTS #23 US2_RTS #22 US3_TX #27 US3_RX #26 US3_CLK #25 US3_CS #24 US3_CTS #23 US3_RTS #22 I2C1_SDA #27 I2C1_SCL #26		
PF15	BUSAY BUSBX	PCNT1_S0IN #28 PCNT1_S1IN #27 PCNT2_S0IN #28 PCNT2_S1IN #27	US2_TX #28 US2_RX #27 US2_CLK #26 US2_CS #25 US2_CTS #24 US2_RTS #23 US3_TX #28 US3_RX #27 US3_CLK #26 US3_CS #25 US3_CTS #24 US3_RTS #23 I2C1_SDA #28 I2C1_SCL #27		
PI0	BUSADC0Y BUSADC0X		US2_TX #5 US2_RX #4 US2_CLK #3 US2_CS #2 US2_CTS #1 US2_RTS #0		LES_ALTEX4

GPIO Name	Pin Alternate Functionality / Description				
	Analog	Timers	Communication	Radio	Other
PI1	BUSADC0Y BUSADC0X		US2_TX #6 US2_RX #5 US2_CLK #4 US2_CS #3 US2_CTS #2 US2_RTS #1		LES_ALTEX5
PI2	BUSADC0Y BUSADC0X	PCNT1_S0IN #4 PCNT1_S1IN #3 PCNT2_S0IN #4 PCNT2_S1IN #3	US2_TX #7 US2_RX #6 US2_CLK #5 US2_CS #4 US2_CTS #3 US2_RTS #2 US3_TX #8 US3_RX #7 US3_CLK #6 US3_CS #5 US3_CTS #4 US3_RTS #3 I2C1_SDA #4 I2C1_SCL #3		LES_ALTEX6 ETM_TCLK #2
PI3	BUSADC0Y BUSADC0X	PCNT1_S0IN #5 PCNT1_S1IN #4 PCNT2_S0IN #5 PCNT2_S1IN #4	US2_TX #8 US2_RX #7 US2_CLK #6 US2_CS #5 US2_CTS #4 US2_RTS #3 US3_TX #9 US3_RX #8 US3_CLK #7 US3_CS #6 US3_CTS #5 US3_RTS #4 I2C1_SDA #5 I2C1_SCL #4		LES_ALTEX7 ETM_TD0 #2

GPIO Name	Pin Alternate Functionality / Description				
	Analog	Timers	Communication	Radio	Other
PJ14	BUSACMP1Y BUSACMP1X	PCNT1_S0IN #11 PCNT1_S1IN #10 PCNT2_S0IN #11 PCNT2_S1IN #10	US3_TX #16 US3_RX #15 US3_CLK #14 US3_CS #13 US3_CTS #12 US3_RTS #11 I2C1_SDA #11 I2C1_SCL #10		LES_ALTEX2
PJ15	BUSACMP1Y BUSACMP1X	PCNT1_S0IN #12 PCNT1_S1IN #11 PCNT2_S0IN #12 PCNT2_S1IN #11	US3_TX #17 US3_RX #16 US3_CLK #15 US3_CS #14 US3_CTS #13 US3_RTS #12 I2C1_SDA #12 I2C1_SCL #11		LES_ALTEX3
PK0	IDAC0_OUT	PCNT1_S0IN #29 PCNT1_S1IN #28 PCNT2_S0IN #29 PCNT2_S1IN #28	US2_TX #29 US2_RX #28 US2_CLK #27 US2_CS #26 US2_CTS #25 US2_RTS #24 US3_TX #29 US3_RX #28 US3_CLK #27 US3_CS #26 US3_CTS #25 US3_RTS #24 I2C1_SDA #29 I2C1_SCL #28		

GPIO Name	Pin Alternate Functionality / Description				
	Analog	Timers	Communication	Radio	Other
PK1		PCNT1_S0IN #30 PCNT1_S1IN #29 PCNT2_S0IN #30 PCNT2_S1IN #29	US2_TX #30 US2_RX #29 US2_CLK #28 US2_CS #27 US2_CTS #26 US2_RTS #25 US3_TX #30 US3_RX #29 US3_CLK #28 US3_CS #27 US3_CTS #26 US3_RTS #25 I2C1_SDA #30 I2C1_SCL #29		
PK2		PCNT1_S0IN #31 PCNT1_S1IN #30 PCNT2_S0IN #31 PCNT2_S1IN #30	US2_TX #31 US2_RX #30 US2_CLK #29 US2_CS #28 US2_CTS #27 US2_RTS #26 US3_TX #31 US3_RX #30 US3_CLK #29 US3_CS #28 US3_CTS #27 US3_RTS #26 I2C1_SDA #31 I2C1_SCL #30		

6.10 Alternate Functionality Overview

A wide selection of alternate functionality is available for multiplexing to various pins. The following table shows the name of the alternate functionality in the first column, followed by columns showing the possible LOCATION bitfield settings and the associated GPIO pin. Refer to 6.9 GPIO Functionality Table for a list of functions available on each GPIO pin.

Note: Some functionality, such as analog interfaces, do not have alternate settings or a LOCATION bitfield. In these cases, the pinout is shown in the column corresponding to LOCATION 0.

Table 6.10. Alternate Functionality Overview

Alternate	LOCATION								
Functionality	0 - 3	4 - 7	8 - 11	12 - 15	16 - 19	20 - 23	24 - 27	28 - 31	Description
ACMP0_O	0: PA0 1: PA1 2: PA2 3: PA3	4: PA4 5: PA5 6: PB11 7: PB12	8: PB13 9: PB14 10: PB15 11: PC6	12: PC7 13: PC8 14: PC9 15: PC10	16: PC11 17: PD9 18: PD10 19: PD11	20: PD12 21: PD13 22: PD14 23: PD15	24: PF0 25: PF1 26: PF2 27: PF3	28: PF4 29: PF5 30: PF6 31: PF7	Analog comparator ACMP0, digital output.
ACMP1_O	0: PA0 1: PA1 2: PA2 3: PA3	4: PA4 5: PA5 6: PB11 7: PB12	8: PB13 9: PB14 10: PB15 11: PC6	12: PC7 13: PC8 14: PC9 15: PC10	16: PC11 17: PD9 18: PD10 19: PD11	20: PD12 21: PD13 22: PD14 23: PD15	24: PF0 25: PF1 26: PF2 27: PF3	28: PF4 29: PF5 30: PF6 31: PF7	Analog comparator ACMP1, digital output.
ADC0_EXTN	0: PA0								Analog to digital converter ADC0 external reference input negative pin.
ADC0_EXTP	0: PA1								Analog to digital converter ADC0 external reference input positive pin.
BOOT_RX	0: PF1								Bootloader RX.
BOOT_TX	0: PF0								Bootloader TX.
CMU_CLK0	0: PA1 1: PB15 2: PC6 3: PC11	4: PD9 5: PD14 6: PF2 7: PF7							Clock Management Unit, clock output number 0.
CMU_CLK1	0: PA0 1: PB14 2: PC7 3: PC10	4: PD10 5: PD15 6: PF3 7: PF6							Clock Management Unit, clock output number 1.
CMU_CLKI0	0: PB13 1: PF7 2: PC6 3: PB6	4: PA5							Clock Management Unit, clock input number 0.

Alternate	LOCATION								
Functionality	0 - 3	4 - 7	8 - 11	12 - 15	16 - 19	20 - 23	24 - 27	28 - 31	Description
DBG_SWCLKTCK	0: PF0								Debug-interface Serial Wire clock input and JTAG Test Clock. Note that this function is enabled to the pin out of reset, and has a built-in pull down.
DBG_SWDIOTMS	0: PF1								Debug-interface Serial Wire data input / output and JTAG Test Mode Select. Note that this function is enabled to the pin out of reset, and has a built-in pull up.
DBG_SWO	0: PF2 1: PB13 2: PD15 3: PC11								Debug-interface Serial Wire viewer Output. Note that this function is not enabled after reset, and must be enabled by software to be used.
DBG_TDI	0: PF3								Debug-interface JTAG Test Data In. Note that this function becomes available after the first valid JTAG command is received, and has a built-in pull up when JTAG is active.
DBG_TDO	0: PF2								Debug-interface JTAG Test Data Out. Note that this function becomes available after the first valid JTAG command is received.
ETM_TCLK	0: PF8 1: PA5 2: PI2 3: PC6								Embedded Trace Module ETM clock .

Alternate	LOCATION								
Functionality	0 - 3	4 - 7	8 - 11	12 - 15	16 - 19	20 - 23	24 - 27	28 - 31	Description
ETM_TD0	0: PF9 1: PA6 2: PI3 3: PC7								Embedded Trace Module ETM data 0.
ETM_TD1	0: PF10 1: PA7 2: PB6 3: PC8								Embedded Trace Module ETM data 1.
ETM_TD2	0: PF11 1: PA8 2: PB7 3: PC9								Embedded Trace Module ETM data 2.
ETM_TD3	0: PF12 1: PA9 2: PB8 3: PC10								Embedded Trace Module ETM data 3.
FRC_DCLK	0: PA0 1: PA1 2: PA2 3: PA3	4: PA4 5: PA5 6: PB11 7: PB12	8: PB13 9: PB14 10: PB15 11: PC6	12: PC7 13: PC8 14: PC9 15: PC10	16: PC11 17: PD9 18: PD10 19: PD11	20: PD12 21: PD13 22: PD14 23: PD15	24: PF0 25: PF1 26: PF2 27: PF3	28: PF4 29: PF5 30: PF6 31: PF7	Frame Controller, Data Sniffer Clock.
FRC_DFRAME	0: PA2 1: PA3 2: PA4 3: PA5	4: PB11 5: PB12 6: PB13 7: PB14	8: PB15 9: PC6 10: PC7 11: PC8	12: PC9 13: PC10 14: PC11 15: PD9	16: PD10 17: PD11 18: PD12 19: PD13	20: PD14 21: PD15 22: PF0 23: PF1	24: PF2 25: PF3 26: PF4 27: PF5	28: PF6 29: PF7 30: PA0 31: PA1	Frame Controller, Data Sniffer Frame active
FRC_DOUT	0: PA1 1: PA2 2: PA3 3: PA4	4: PA5 5: PB11 6: PB12 7: PB13	8: PB14 9: PB15 10: PC6 11: PC7	12: PC8 13: PC9 14: PC10 15: PC11	16: PD9 17: PD10 18: PD11 19: PD12	20: PD13 21: PD14 22: PD15 23: PF0	24: PF1 25: PF2 26: PF3 27: PF4	28: PF5 29: PF6 30: PF7 31: PA0	Frame Controller, Data Sniffer Output.
GPIO_EM4WU0	0: PF2								Pin can be used to wake the system up from EM4
GPIO_EM4WU1	0: PF7								Pin can be used to wake the system up from EM4
GPIO_EM4WU4	0: PD14								Pin can be used to wake the system up from EM4

Alternate	LOCATION								
Functionality	0 - 3	4 - 7	8 - 11	12 - 15	16 - 19	20 - 23	24 - 27	28 - 31	Description
GPIO_EM4WU8	0: PA3								Pin can be used to wake the system up from EM4
GPIO_EM4WU9	0: PB13								Pin can be used to wake the system up from EM4
GPIO_EM4WU12	0: PC10								Pin can be used to wake the system up from EM4
I2C0_SCL	0: PA1 1: PA2 2: PA3 3: PA4	4: PA5 5: PB11 6: PB12 7: PB13	8: PB14 9: PB15 10: PC6 11: PC7	12: PC8 13: PC9 14: PC10 15: PC11	16: PD9 17: PD10 18: PD11 19: PD12	20: PD13 21: PD14 22: PD15 23: PF0	24: PF1 25: PF2 26: PF3 27: PF4	28: PF5 29: PF6 30: PF7 31: PA0	I2C0 Serial Clock Line input / output.
I2C0_SDA	0: PA0 1: PA1 2: PA2 3: PA3	4: PA4 5: PA5 6: PB11 7: PB12	8: PB13 9: PB14 10: PB15 11: PC6	12: PC7 13: PC8 14: PC9 15: PC10	16: PC11 17: PD9 18: PD10 19: PD11	20: PD12 21: PD13 22: PD14 23: PD15	24: PF0 25: PF1 26: PF2 27: PF3	28: PF4 29: PF5 30: PF6 31: PF7	I2C0 Serial Data input / output.
I2C1_SCL	0: PA7 1: PA8 2: PA9 3: PI2	4: PI3 5: PB6 6: PB7 7: PB8	8: PB9 9: PB10 10: PJ14 11: PJ15	12: PC0 13: PC1 14: PC2 15: PC3	16: PC4 17: PC5 18: PC10 19: PC11	20: PF8 21: PF9 22: PF10 23: PF11	24: PF12 25: PF13 26: PF14 27: PF15	28: PK0 29: PK1 30: PK2 31: PA6	I2C1 Serial Clock Line input / output.
I2C1_SDA	0: PA6 1: PA7 2: PA8 3: PA9	4: PI2 5: PI3 6: PB6 7: PB7	8: PB8 9: PB9 10: PB10 11: PJ14	12: PJ15 13: PC0 14: PC1 15: PC2	16: PC3 17: PC4 18: PC5 19: PC10	20: PC11 21: PF8 22: PF9 23: PF10	24: PF11 25: PF12 26: PF13 27: PF14	28: PF15 29: PK0 30: PK1 31: PK2	I2C1 Serial Data input / output.
IDAC0_OUT	0: PK0								IDAC0 output.
LES_ALTEX0	0: PA8								LESENSE alternate excite output 0.
LES_ALTEX1	0: PA9								LESENSE alternate excite output 1.
LES_ALTEX2	0: PJ14								LESENSE alternate excite output 2.
LES_ALTEX3	0: PJ15								LESENSE alternate excite output 3.
LES_ALTEX4	0: PI0								LESENSE alternate excite output 4.
LES_ALTEX5	0: PI1								LESENSE alternate excite output 5.
LES_ALTEX6	0: PI2								LESENSE alternate excite output 6.
LES_ALTEX7	0: PI3								LESENSE alternate excite output 7.

Alternate	LOCATION								
Functionality	0 - 3	4 - 7	8 - 11	12 - 15	16 - 19	20 - 23	24 - 27	28 - 31	Description
LES_CH0	0: PD8								LESENSE channel 0.
LES_CH1	0: PD9								LESENSE channel 1.
LES_CH2	0: PD10								LESENSE channel 2.
LES_CH3	0: PD11								LESENSE channel 3.
LES_CH4	0: PD12								LESENSE channel 4.
LES_CH5	0: PD13								LESENSE channel 5.
LES_CH6	0: PD14								LESENSE channel 6.
LES_CH7	0: PD15								LESENSE channel 7.
LES_CH8	0: PA0								LESENSE channel 8.
LES_CH9	0: PA1								LESENSE channel 9.
LES_CH10	0: PA2								LESENSE channel 10.
LES_CH11	0: PA3								LESENSE channel 11.
LES_CH12	0: PA4								LESENSE channel 12.
LES_CH13	0: PA5								LESENSE channel 13.
LES_CH14	0: PA6								LESENSE channel 14.
LES_CH15	0: PA7								LESENSE channel 15.
LETIM0_OUT0	0: PA0 1: PA1 2: PA2 3: PA3	4: PA4 5: PA5 6: PB11 7: PB12	8: PB13 9: PB14 10: PB15 11: PC6	12: PC7 13: PC8 14: PC9 15: PC10	16: PC11 17: PD9 18: PD10 19: PD11	20: PD12 21: PD13 22: PD14 23: PD15	24: PF0 25: PF1 26: PF2 27: PF3	28: PF4 29: PF5 30: PF6 31: PF7	Low Energy Timer LETIM0, output channel 0.
LETIM0_OUT1	0: PA1 1: PA2 2: PA3 3: PA4	4: PA5 5: PB11 6: PB12 7: PB13	8: PB14 9: PB15 10: PC6 11: PC7	12: PC8 13: PC9 14: PC10 15: PC11	16: PD9 17: PD10 18: PD11 19: PD12	20: PD13 21: PD14 22: PD15 23: PF0	24: PF1 25: PF2 26: PF3 27: PF4	28: PF5 29: PF6 30: PF7 31: PA0	Low Energy Timer LETIM0, output channel 1.

Alternate	LOCATION								
Functionality	0 - 3	4 - 7	8 - 11	12 - 15	16 - 19	20 - 23	24 - 27	28 - 31	Description
LEU0_RX	0: PA1 1: PA2 2: PA3 3: PA4	4: PA5 5: PB11 6: PB12 7: PB13	8: PB14 9: PB15 10: PC6 11: PC7	12: PC8 13: PC9 14: PC10 15: PC11	16: PD9 17: PD10 18: PD11 19: PD12	20: PD13 21: PD14 22: PD15 23: PF0	24: PF1 25: PF2 26: PF3 27: PF4	28: PF5 29: PF6 30: PF7 31: PA0	LEUART0 Receive input.
LEU0_TX	0: PA0 1: PA1 2: PA2 3: PA3	4: PA4 5: PA5 6: PB11 7: PB12	8: PB13 9: PB14 10: PB15 11: PC6	12: PC7 13: PC8 14: PC9 15: PC10	16: PC11 17: PD9 18: PD10 19: PD11	20: PD12 21: PD13 22: PD14 23: PD15	24: PF0 25: PF1 26: PF2 27: PF3	28: PF4 29: PF5 30: PF6 31: PF7	LEUART0 Transmit output. Also used as receive input in half duplex communication.
LFXTAL_N	0: PB14								Low Frequency Crystal (typically 32.768 kHz) negative pin. Also used as an optional external clock input pin.
LFXTAL_P	0: PB15								Low Frequency Crystal (typically 32.768 kHz) positive pin.
MODEM_ANT0	0: PA3 1: PA4 2: PA5 3: PB11	4: PB12 5: PB13 6: PB14 7: PB15	8: PC6 9: PC7 10: PC8 11: PC9	12: PC10 13: PC11 14: PD9 15: PD10	16: PD11 17: PD12 18: PD13 19: PD14	20: PD15 21: PF0 22: PF1 23: PF2	24: PF3 25: PF4 26: PF5 27: PF6	28: PF7 29: PA0 30: PA1 31: PA2	MODEM antenna control output 0, used for antenna diversity.
MODEM_ANT1	0: PA4 1: PA5 2: PB11 3: PB12	4: PB13 5: PB14 6: PB15 7: PC6	8: PC7 9: PC8 10: PC9 11: PC10	12: PC11 13: PD9 14: PD10 15: PD11	16: PD12 17: PD13 18: PD14 19: PD15	20: PF0 21: PF1 22: PF2 23: PF3	24: PF4 25: PF5 26: PF6 27: PF7	28: PA0 29: PA1 30: PA2 31: PA3	MODEM antenna control output 1, used for antenna diversity.
MODEM_DCLK	0: PA0 1: PA1 2: PA2 3: PA3	4: PA4 5: PA5 6: PB11 7: PB12	8: PB13 9: PB14 10: PB15 11: PC6	12: PC7 13: PC8 14: PC9 15: PC10	16: PC11 17: PD9 18: PD10 19: PD11	20: PD12 21: PD13 22: PD14 23: PD15	24: PF0 25: PF1 26: PF2 27: PF3	28: PF4 29: PF5 30: PF6 31: PF7	MODEM data clock out.
MODEM_DIN	0: PA1 1: PA2 2: PA3 3: PA4	4: PA5 5: PB11 6: PB12 7: PB13	8: PB14 9: PB15 10: PC6 11: PC7	12: PC8 13: PC9 14: PC10 15: PC11	16: PD9 17: PD10 18: PD11 19: PD12	20: PD13 21: PD14 22: PD15 23: PF0	24: PF1 25: PF2 26: PF3 27: PF4	28: PF5 29: PF6 30: PF7 31: PA0	MODEM data in.
MODEM_DOUT	0: PA2 1: PA3 2: PA4 3: PA5	4: PB11 5: PB12 6: PB13 7: PB14	8: PB15 9: PC6 10: PC7 11: PC8	12: PC9 13: PC10 14: PC11 15: PD9	16: PD10 17: PD11 18: PD12 19: PD13	20: PD14 21: PD15 22: PF0 23: PF1	24: PF2 25: PF3 26: PF4 27: PF5	28: PF6 29: PF7 30: PA0 31: PA1	MODEM data out.

Alternate	LOCATION								
Functionality	0 - 3	4 - 7	8 - 11	12 - 15	16 - 19	20 - 23	24 - 27	28 - 31	Description
OPA0_N	0: PA4								Operational Amplifier 0 external negative input.
OPA0_P	0: PA2								Operational Amplifier 0 external positive input.
OPA1_N	0: PD15								Operational Amplifier 1 external negative input.
OPA1_P	0: PD13								Operational Amplifier 1 external positive input.
OPA2_N	0: PB13								Operational Amplifier 2 external negative input.
OPA2_OUT	0: PB12								Operational Amplifier 2 output.
OPA2_OUTALT	0: PB9 1: PB10								Operational Amplifier 2 alternative output.
OPA2_P	0: PB11								Operational Amplifier 2 external positive input.
PCNT0_S0IN	0: PA0 1: PA1 2: PA2 3: PA3	4: PA4 5: PA5 6: PB11 7: PB12	8: PB13 9: PB14 10: PB15 11: PC6	12: PC7 13: PC8 14: PC9 15: PC10	16: PC11 17: PD9 18: PD10 19: PD11	20: PD12 21: PD13 22: PD14 23: PD15	24: PF0 25: PF1 26: PF2 27: PF3	28: PF4 29: PF5 30: PF6 31: PF7	Pulse Counter PCNT0 input number 0.
PCNT0_S1IN	0: PA1 1: PA2 2: PA3 3: PA4	4: PA5 5: PB11 6: PB12 7: PB13	8: PB14 9: PB15 10: PC6 11: PC7	12: PC8 13: PC9 14: PC10 15: PC11	16: PD9 17: PD10 18: PD11 19: PD12	20: PD13 21: PD14 22: PD15 23: PF0	24: PF1 25: PF2 26: PF3 27: PF4	28: PF5 29: PF6 30: PF7 31: PA0	Pulse Counter PCNT0 input number 1.
PCNT1_S0IN	0: PA6 1: PA7 2: PA8 3: PA9	4: PI2 5: PI3 6: PB6 7: PB7	8: PB8 9: PB9 10: PB10 11: PJ14	12: PJ15 13: PC0 14: PC1 15: PC2	16: PC3 17: PC4 18: PC5 19: PF6	20: PF7 21: PF8 22: PF9 23: PF10	24: PF11 25: PF12 26: PF13 27: PF14	28: PF15 29: PK0 30: PK1 31: PK2	Pulse Counter PCNT1 input number 0.
PCNT1_S1IN	0: PA7 1: PA8 2: PA9 3: PI2	4: PI3 5: PB6 6: PB7 7: PB8	8: PB9 9: PB10 10: PJ14 11: PJ15	12: PC0 13: PC1 14: PC2 15: PC3	16: PC4 17: PC5 18: PF6 19: PF7	20: PF8 21: PF9 22: PF10 23: PF11	24: PF12 25: PF13 26: PF14 27: PF15	28: PK0 29: PK1 30: PK2 31: PA6	Pulse Counter PCNT1 input number 1.

Alternate	LOCATION								
Functionality	0 - 3	4 - 7	8 - 11	12 - 15	16 - 19	20 - 23	24 - 27	28 - 31	Description
PCNT2_S0IN	0: PA6 1: PA7 2: PA8 3: PA9	4: PI2 5: PI3 6: PB6 7: PB7	8: PB8 9: PB9 10: PB10 11: PJ14	12: PJ15 13: PC0 14: PC1 15: PC2	16: PC3 17: PC4 18: PC5 19: PC10	20: PC11 21: PF8 22: PF9 23: PF10	24: PF11 25: PF12 26: PF13 27: PF14	28: PF15 29: PK0 30: PK1 31: PK2	Pulse Counter PCNT2 input number 0.
PCNT2_S1IN	0: PA7 1: PA8 2: PA9 3: PI2	4: PI3 5: PB6 6: PB7 7: PB8	8: PB9 9: PB10 10: PJ14 11: PJ15	12: PC0 13: PC1 14: PC2 15: PC3	16: PC4 17: PC5 18: PC10 19: PC11	20: PF8 21: PF9 22: PF10 23: PF11	24: PF12 25: PF13 26: PF14 27: PF15	28: PK0 29: PK1 30: PK2 31: PA6	Pulse Counter PCNT2 input number 1.
PRS_CH0	0: PF0 1: PF1 2: PF2 3: PF3	4: PF4 5: PF5 6: PF6 7: PF7	8: PC6 9: PC7 10: PC8 11: PC9	12: PC10 13: PC11					Peripheral Reflex System PRS, channel 0.
PRS_CH1	0: PF1 1: PF2 2: PF3 3: PF4	4: PF5 5: PF6 6: PF7 7: PF0							Peripheral Reflex System PRS, channel 1.
PRS_CH2	0: PF2 1: PF3 2: PF4 3: PF5	4: PF6 5: PF7 6: PF0 7: PF1							Peripheral Reflex System PRS, channel 2.
PRS_CH3	0: PF3 1: PF4 2: PF5 3: PF6	4: PF7 5: PF0 6: PF1 7: PF2	8: PD9 9: PD10 10: PD11 11: PD12	12: PD13 13: PD14 14: PD15					Peripheral Reflex System PRS, channel 3.
PRS_CH4	0: PD9 1: PD10 2: PD11 3: PD12	4: PD13 5: PD14 6: PD15							Peripheral Reflex System PRS, channel 4.
PRS_CH5	0: PD10 1: PD11 2: PD12 3: PD13	4: PD14 5: PD15 6: PD9							Peripheral Reflex System PRS, channel 5.
PRS_CH6	0: PA0 1: PA1 2: PA2 3: PA3	4: PA4 5: PA5 6: PB11 7: PB12	8: PB13 9: PB14 10: PB15 11: PD9	12: PD10 13: PD11 14: PD12 15: PD13	16: PD14 17: PD15				Peripheral Reflex System PRS, channel 6.

Alternate	LOCATION								
Functionality	0 - 3	4 - 7	8 - 11	12 - 15	16 - 19	20 - 23	24 - 27	28 - 31	Description
PRS_CH7	0: PA1 1: PA2 2: PA3 3: PA4	4: PA5 5: PB11 6: PB12 7: PB13	8: PB14 9: PB15 10: PA0						Peripheral Reflex System PRS, channel 7.
PRS_CH8	0: PA2 1: PA3 2: PA4 3: PA5	4: PB11 5: PB12 6: PB13 7: PB14	8: PB15 9: PA0 10: PA1						Peripheral Reflex System PRS, channel 8.
PRS_CH9	0: PA3 1: PA4 2: PA5 3: PB11	4: PB12 5: PB13 6: PB14 7: PB15	8: PA0 9: PA1 10: PA2 11: PC6	12: PC7 13: PC8 14: PC9 15: PC10	16: PC11				Peripheral Reflex System PRS, channel 9.
PRS_CH10	0: PC6 1: PC7 2: PC8 3: PC9	4: PC10 5: PC11							Peripheral Reflex System PRS, channel 10.
PRS_CH11	0: PC7 1: PC8 2: PC9 3: PC10	4: PC11 5: PC6							Peripheral Reflex System PRS, channel 11.
TIM0_CC0	0: PA0 1: PA1 2: PA2 3: PA3	4: PA4 5: PA5 6: PB11 7: PB12	8: PB13 9: PB14 10: PB15 11: PC6	12: PC7 13: PC8 14: PC9 15: PC10	16: PC11 17: PD9 18: PD10 19: PD11	20: PD12 21: PD13 22: PD14 23: PD15	24: PF0 25: PF1 26: PF2 27: PF3	28: PF4 29: PF5 30: PF6 31: PF7	Timer 0 Capture Compare input / output channel 0.
TIM0_CC1	0: PA1 1: PA2 2: PA3 3: PA4	4: PA5 5: PB11 6: PB12 7: PB13	8: PB14 9: PB15 10: PC6 11: PC7	12: PC8 13: PC9 14: PC10 15: PC11	16: PD9 17: PD10 18: PD11 19: PD12	20: PD13 21: PD14 22: PD15 23: PF0	24: PF1 25: PF2 26: PF3 27: PF4	28: PF5 29: PF6 30: PF7 31: PA0	Timer 0 Capture Compare input / output channel 1.
TIM0_CC2	0: PA2 1: PA3 2: PA4 3: PA5	4: PB11 5: PB12 6: PB13 7: PB14	8: PB15 9: PC6 10: PC7 11: PC8	12: PC9 13: PC10 14: PC11 15: PD9	16: PD10 17: PD11 18: PD12 19: PD13	20: PD14 21: PD15 22: PF0 23: PF1	24: PF2 25: PF3 26: PF4 27: PF5	28: PF6 29: PF7 30: PA0 31: PA1	Timer 0 Capture Compare input / output channel 2.
TIM0_CDTI0	0: PA3 1: PA4 2: PA5 3: PB11	4: PB12 5: PB13 6: PB14 7: PB15	8: PC6 9: PC7 10: PC8 11: PC9	12: PC10 13: PC11 14: PD9 15: PD10	16: PD11 17: PD12 18: PD13 19: PD14	20: PD15 21: PF0 22: PF1 23: PF2	24: PF3 25: PF4 26: PF5 27: PF6	28: PF7 29: PA0 30: PA1 31: PA2	Timer 0 Complimentary Dead Time Insertion channel 0.

Alternate	LOCATION								
Functionality	0 - 3	4 - 7	8 - 11	12 - 15	16 - 19	20 - 23	24 - 27	28 - 31	Description
TIM0_CDTI1	0: PA4 1: PA5 2: PB11 3: PB12	4: PB13 5: PB14 6: PB15 7: PC6	8: PC7 9: PC8 10: PC9 11: PC10	12: PC11 13: PD9 14: PD10 15: PD11	16: PD12 17: PD13 18: PD14 19: PD15	20: PF0 21: PF1 22: PF2 23: PF3	24: PF4 25: PF5 26: PF6 27: PF7	28: PA0 29: PA1 30: PA2 31: PA3	Timer 0 Complimentary Dead Time Insertion channel 1.
TIM0_CDTI2	0: PA5 1: PB11 2: PB12 3: PB13	4: PB14 5: PB15 6: PC6 7: PC7	8: PC8 9: PC9 10: PC10 11: PC11	12: PD9 13: PD10 14: PD11 15: PD12	16: PD13 17: PD14 18: PD15 19: PF0	20: PF1 21: PF2 22: PF3 23: PF4	24: PF5 25: PF6 26: PF7 27: PA0	28: PA1 29: PA2 30: PA3 31: PA4	Timer 0 Complimentary Dead Time Insertion channel 2.
TIM1_CC0	0: PA0 1: PA1 2: PA2 3: PA3	4: PA4 5: PA5 6: PB11 7: PB12	8: PB13 9: PB14 10: PB15 11: PC6	12: PC7 13: PC8 14: PC9 15: PC10	16: PC11 17: PD9 18: PD10 19: PD11	20: PD12 21: PD13 22: PD14 23: PD15	24: PF0 25: PF1 26: PF2 27: PF3	28: PF4 29: PF5 30: PF6 31: PF7	Timer 1 Capture Compare input / output channel 0.
TIM1_CC1	0: PA1 1: PA2 2: PA3 3: PA4	4: PA5 5: PB11 6: PB12 7: PB13	8: PB14 9: PB15 10: PC6 11: PC7	12: PC8 13: PC9 14: PC10 15: PC11	16: PD9 17: PD10 18: PD11 19: PD12	20: PD13 21: PD14 22: PD15 23: PF0	24: PF1 25: PF2 26: PF3 27: PF4	28: PF5 29: PF6 30: PF7 31: PA0	Timer 1 Capture Compare input / output channel 1.
TIM1_CC2	0: PA2 1: PA3 2: PA4 3: PA5	4: PB11 5: PB12 6: PB13 7: PB14	8: PB15 9: PC6 10: PC7 11: PC8	12: PC9 13: PC10 14: PC11 15: PD9	16: PD10 17: PD11 18: PD12 19: PD13	20: PD14 21: PD15 22: PF0 23: PF1	24: PF2 25: PF3 26: PF4 27: PF5	28: PF6 29: PF7 30: PA0 31: PA1	Timer 1 Capture Compare input / output channel 2.
TIM1_CC3	0: PA3 1: PA4 2: PA5 3: PB11	4: PB12 5: PB13 6: PB14 7: PB15	8: PC6 9: PC7 10: PC8 11: PC9	12: PC10 13: PC11 14: PD9 15: PD10	16: PD11 17: PD12 18: PD13 19: PD14	20: PD15 21: PF0 22: PF1 23: PF2	24: PF3 25: PF4 26: PF5 27: PF6	28: PF7 29: PA0 30: PA1 31: PA2	Timer 1 Capture Compare input / output channel 3.
US0_CLK	0: PA2 1: PA3 2: PA4 3: PA5	4: PB11 5: PB12 6: PB13 7: PB14	8: PB15 9: PC6 10: PC7 11: PC8	12: PC9 13: PC10 14: PC11 15: PD9	16: PD10 17: PD11 18: PD12 19: PD13	20: PD14 21: PD15 22: PF0 23: PF1	24: PF2 25: PF3 26: PF4 27: PF5	28: PF6 29: PF7 30: PA0 31: PA1	USART0 clock input / output.
US0_CS	0: PA3 1: PA4 2: PA5 3: PB11	4: PB12 5: PB13 6: PB14 7: PB15	8: PC6 9: PC7 10: PC8 11: PC9	12: PC10 13: PC11 14: PD9 15: PD10	16: PD11 17: PD12 18: PD13 19: PD14	20: PD15 21: PF0 22: PF1 23: PF2	24: PF3 25: PF4 26: PF5 27: PF6	28: PF7 29: PA0 30: PA1 31: PA2	USART0 chip select input / output.
US0_CTS	0: PA4 1: PA5 2: PB11 3: PB12	4: PB13 5: PB14 6: PB15 7: PC6	8: PC7 9: PC8 10: PC9 11: PC10	12: PC11 13: PD9 14: PD10 15: PD11	16: PD12 17: PD13 18: PD14 19: PD15	20: PF0 21: PF1 22: PF2 23: PF3	24: PF4 25: PF5 26: PF6 27: PF7	28: PA0 29: PA1 30: PA2 31: PA3	USART0 Clear To Send hardware flow control input.

Alternate	LOCATION								
Functionality	0 - 3	4 - 7	8 - 11	12 - 15	16 - 19	20 - 23	24 - 27	28 - 31	Description
US0_RTS	0: PA5 1: PB11 2: PB12 3: PB13	4: PB14 5: PB15 6: PC6 7: PC7	8: PC8 9: PC9 10: PC10 11: PC11	12: PD9 13: PD10 14: PD11 15: PD12	16: PD13 17: PD14 18: PD15 19: PF0	20: PF1 21: PF2 22: PF3 23: PF4	24: PF5 25: PF6 26: PF7 27: PA0	28: PA1 29: PA2 30: PA3 31: PA4	USART0 Request To Send hardware flow control output.
US0_RX	0: PA1 1: PA2 2: PA3 3: PA4	4: PA5 5: PB11 6: PB12 7: PB13	8: PB14 9: PB15 10: PC6 11: PC7	12: PC8 13: PC9 14: PC10 15: PC11	16: PD9 17: PD10 18: PD11 19: PD12	20: PD13 21: PD14 22: PD15 23: PF0	24: PF1 25: PF2 26: PF3 27: PF4	28: PF5 29: PF6 30: PF7 31: PA0	USART0 Asynchronous Receive. USART0 Synchronous mode Master Input / Slave Output (MISO).
US0_TX	0: PA0 1: PA1 2: PA2 3: PA3	4: PA4 5: PA5 6: PB11 7: PB12	8: PB13 9: PB14 10: PB15 11: PC6	12: PC7 13: PC8 14: PC9 15: PC10	16: PC11 17: PD9 18: PD10 19: PD11	20: PD12 21: PD13 22: PD14 23: PD15	24: PF0 25: PF1 26: PF2 27: PF3	28: PF4 29: PF5 30: PF6 31: PF7	USART0 Asynchronous Transmit. Also used as receive input in half duplex communication. USART0 Synchronous mode Master Output / Slave Input (MOSI).
US1_CLK	0: PA2 1: PA3 2: PA4 3: PA5	4: PB11 5: PB12 6: PB13 7: PB14	8: PB15 9: PC6 10: PC7 11: PC8	12: PC9 13: PC10 14: PC11 15: PD9	16: PD10 17: PD11 18: PD12 19: PD13	20: PD14 21: PD15 22: PF0 23: PF1	24: PF2 25: PF3 26: PF4 27: PF5	28: PF6 29: PF7 30: PA0 31: PA1	USART1 clock input / output.
US1_CS	0: PA3 1: PA4 2: PA5 3: PB11	4: PB12 5: PB13 6: PB14 7: PB15	8: PC6 9: PC7 10: PC8 11: PC9	12: PC10 13: PC11 14: PD9 15: PD10	16: PD11 17: PD12 18: PD13 19: PD14	20: PD15 21: PF0 22: PF1 23: PF2	24: PF3 25: PF4 26: PF5 27: PF6	28: PF7 29: PA0 30: PA1 31: PA2	USART1 chip select input / output.
US1_CTS	0: PA4 1: PA5 2: PB11 3: PB12	4: PB13 5: PB14 6: PB15 7: PC6	8: PC7 9: PC8 10: PC9 11: PC10	12: PC11 13: PD9 14: PD10 15: PD11	16: PD12 17: PD13 18: PD14 19: PD15	20: PF0 21: PF1 22: PF2 23: PF3	24: PF4 25: PF5 26: PF6 27: PF7	28: PA0 29: PA1 30: PA2 31: PA3	USART1 Clear To Send hardware flow control input.
US1_RTS	0: PA5 1: PB11 2: PB12 3: PB13	4: PB14 5: PB15 6: PC6 7: PC7	8: PC8 9: PC9 10: PC10 11: PC11	12: PD9 13: PD10 14: PD11 15: PD12	16: PD13 17: PD14 18: PD15 19: PF0	20: PF1 21: PF2 22: PF3 23: PF4	24: PF5 25: PF6 26: PF7 27: PA0	28: PA1 29: PA2 30: PA3 31: PA4	USART1 Request To Send hardware flow control output.
US1_RX	0: PA1 1: PA2 2: PA3 3: PA4	4: PA5 5: PB11 6: PB12 7: PB13	8: PB14 9: PB15 10: PC6 11: PC7	12: PC8 13: PC9 14: PC10 15: PC11	16: PD9 17: PD10 18: PD11 19: PD12	20: PD13 21: PD14 22: PD15 23: PF0	24: PF1 25: PF2 26: PF3 27: PF4	28: PF5 29: PF6 30: PF7 31: PA0	USART1 Asynchronous Receive. USART1 Synchronous mode Master Input / Slave Output (MISO).

Alternate	LOCATION								
Functionality	0 - 3	4 - 7	8 - 11	12 - 15	16 - 19	20 - 23	24 - 27	28 - 31	Description
US1_TX	0: PA0 1: PA1 2: PA2 3: PA3	4: PA4 5: PA5 6: PB11 7: PB12	8: PB13 9: PB14 10: PB15 11: PC6	12: PC7 13: PC8 14: PC9 15: PC10	16: PC11 17: PD9 18: PD10 19: PD11	20: PD12 21: PD13 22: PD14 23: PD15	24: PF0 25: PF1 26: PF2 27: PF3	28: PF4 29: PF5 30: PF6 31: PF7	USART1 Asynchronous Transmit. Also used as receive input in half duplex communication. USART1 Synchronous mode Master Output / Slave Input (MOSI).
US2_CLK	0: PA7 1: PA8 2: PA9 3: PI0	4: PI1 5: PI2 6: PI3 7: PB6	8: PB7 9: PB8 10: PB9 11: PB10	12: PF0 13: PF1 14: PF3 15: PF4	16: PF5 17: PF6 18: PF7 19: PF8	20: PF9 21: PF10 22: PF11 23: PF12	24: PF13 25: PF14 26: PF15 27: PK0	28: PK1 29: PK2 30: PA5 31: PA6	USART2 clock input / output.
US2_CS	0: PA8 1: PA9 2: PI0 3: PI1	4: PI2 5: PI3 6: PB6 7: PB7	8: PB8 9: PB9 10: PB10 11: PF0	12: PF1 13: PF3 14: PF4 15: PF5	16: PF6 17: PF7 18: PF8 19: PF9	20: PF10 21: PF11 22: PF12 23: PF13	24: PF14 25: PF15 26: PK0 27: PK1	28: PK2 29: PA5 30: PA6 31: PA7	USART2 chip select input / output.
US2_CTS	0: PA9 1: PI0 2: PI1 3: PI2	4: PI3 5: PB6 6: PB7 7: PB8	8: PB9 9: PB10 10: PF0 11: PF1	12: PF3 13: PF4 14: PF5 15: PF6	16: PF7 17: PF8 18: PF9 19: PF10	20: PF11 21: PF12 22: PF13 23: PF14	24: PF15 25: PK0 26: PK1 27: PK2	28: PA5 29: PA6 30: PA7 31: PA8	USART2 Clear To Send hardware flow control input.
US2_RTS	0: PI0 1: PI1 2: PI2 3: PI3	4: PB6 5: PB7 6: PB8 7: PB9	8: PB10 9: PF0 10: PF1 11: PF3	12: PF4 13: PF5 14: PF6 15: PF7	16: PF8 17: PF9 18: PF10 19: PF11	20: PF12 21: PF13 22: PF14 23: PF15	24: PK0 25: PK1 26: PK2 27: PA5	28: PA6 29: PA7 30: PA8 31: PA9	USART2 Request To Send hardware flow control output.
US2_RX	0: PA6 1: PA7 2: PA8 3: PA9	4: PI0 5: PI1 6: PI2 7: PI3	8: PB6 9: PB7 10: PB8 11: PB9	12: PB10 13: PF0 14: PF1 15: PF3	16: PF4 17: PF5 18: PF6 19: PF7	20: PF8 21: PF9 22: PF10 23: PF11	24: PF12 25: PF13 26: PF14 27: PF15	28: PK0 29: PK1 30: PK2 31: PA5	USART2 Asynchronous Receive. USART2 Synchronous mode Master Input / Slave Output (MISO).
US2_TX	0: PA5 1: PA6 2: PA7 3: PA8	4: PA9 5: PI0 6: PI1 7: PI2	8: PI3 9: PB6 10: PB7 11: PB8	12: PB9 13: PB10 14: PF0 15: PF1	16: PF3 17: PF4 18: PF5 19: PF6	20: PF7 21: PF8 22: PF9 23: PF10	24: PF11 25: PF12 26: PF13 27: PF14	28: PF15 29: PK0 30: PK1 31: PK2	USART2 Asynchronous Transmit. Also used as receive input in half duplex communication. USART2 Synchronous mode Master Output / Slave Input (MOSI).

Alternate	LOCATION								
Functionality	0 - 3	4 - 7	8 - 11	12 - 15	16 - 19	20 - 23	24 - 27	28 - 31	Description
US3_CLK	0: PD10 1: PD11 2: PD12 3: PD13	4: PD14 5: PD15 6: PI2 7: PI3	8: PB6 9: PB7 10: PB8 11: PB9	12: PB10 13: PB11 14: PJ14 15: PJ15	16: PC0 17: PC1 18: PC2 19: PC3	20: PC4 21: PC5 22: PF11 23: PF12	24: PF13 25: PF14 26: PF15 27: PK0	28: PK1 29: PK2 30: PD8 31: PD9	USART3 clock input / output.
US3_CS	0: PD11 1: PD12 2: PD13 3: PD14	4: PD15 5: PI2 6: PI3 7: PB6	8: PB7 9: PB8 10: PB9 11: PB10	12: PB11 13: PJ14 14: PJ15 15: PC0	16: PC1 17: PC2 18: PC3 19: PC4	20: PC5 21: PF11 22: PF12 23: PF13	24: PF14 25: PF15 26: PK0 27: PK1	28: PK2 29: PD8 30: PD9 31: PD10	USART3 chip select input / output.
US3_CTS	0: PD12 1: PD13 2: PD14 3: PD15	4: PI2 5: PI3 6: PB6 7: PB7	8: PB8 9: PB9 10: PB10 11: PB11	12: PJ14 13: PJ15 14: PC0 15: PC1	16: PC2 17: PC3 18: PC4 19: PC5	20: PF11 21: PF12 22: PF13 23: PF14	24: PF15 25: PK0 26: PK1 27: PK2	28: PD8 29: PD9 30: PD10 31: PD11	USART3 Clear To Send hardware flow control input.
US3_RTS	0: PD13 1: PD14 2: PD15 3: PI2	4: PI3 5: PB6 6: PB7 7: PB8	8: PB9 9: PB10 10: PB11 11: PJ14	12: PJ15 13: PC0 14: PC1 15: PC2	16: PC3 17: PC4 18: PC5 19: PF11	20: PF12 21: PF13 22: PF14 23: PF15	24: PK0 25: PK1 26: PK2 27: PD8	28: PD9 29: PD10 30: PD11 31: PD12	USART3 Request To Send hardware flow control output.
US3_RX	0: PD9 1: PD10 2: PD11 3: PD12	4: PD13 5: PD14 6: PD15 7: PI2	8: PI3 9: PB6 10: PB7 11: PB8	12: PB9 13: PB10 14: PB11 15: PJ14	16: PJ15 17: PC0 18: PC1 19: PC2	20: PC3 21: PC4 22: PC5 23: PF11	24: PF12 25: PF13 26: PF14 27: PF15	28: PK0 29: PK1 30: PK2 31: PD8	USART3 Asynchronous Receive. USART3 Synchronous mode Master Input / Slave Output (MISO).
US3_TX	0: PD8 1: PD9 2: PD10 3: PD11	4: PD12 5: PD13 6: PD14 7: PD15	8: PI2 9: PI3 10: PB6 11: PB7	12: PB8 13: PB9 14: PB10 15: PB11	16: PJ14 17: PJ15 18: PC0 19: PC1	20: PC2 21: PC3 22: PC4 23: PC5	24: PF11 25: PF12 26: PF13 27: PF14	28: PF15 29: PK0 30: PK1 31: PK2	USART3 Asynchronous Transmit. Also used as receive input in half duplex communication. USART3 Synchronous mode Master Output / Slave Input (MOSI).
VDAC0_EXT	0: PA1								Digital to analog converter VDAC0 external reference input pin.
VDAC0_OUT0 / OPA0_OUT	0: PA3								Digital to Analog Converter DAC0 output channel number 0.
VDAC0_OUT0ALT / OPA0_OUTALT	0: PA5 1: PD13 2: PD15								Digital to Analog Converter DAC0 alternative output for channel 0.

Alternate	LOCATION								
Functionality	0 - 3	4 - 7	8 - 11	12 - 15	16 - 19	20 - 23	24 - 27	28 - 31	Description
VDAC0_OUT1 / OPA1_OUT	0: PD14								Digital to Analog Converter DAC0 output channel number 1.
VDAC0_OUT1ALT / OPA1_OUT-ALT	0: PD12 1: PA2 2: PA4								Digital to Analog Converter DAC0 alternative output for channel 1.
WTIM0_CC0	0: PA0 1: PA1 2: PA2 3: PA3	4: PA4 5: PA5 6: PA6 7: PA7	8: PA8 9: PA9 10: PB6 11: PB7	12: PB8 13: PB9 14: PB10 15: PB11	16: PB12 17: PB13 18: PB14 19: PB15	20: PC0 21: PC1 22: PC2 23: PC3	24: PC4 25: PC5 26: PC6 27: PC7	28: PC8 29: PC9 30: PC10 31: PC11	Wide timer 0 Capture Compare input / output channel 0.
WTIM0_CC1	0: PA2 1: PA3 2: PA4 3: PA5	4: PA6 5: PA7 6: PA8 7: PA9	8: PB6 9: PB7 10: PB8 11: PB9	12: PB10 13: PB11 14: PB12 15: PB13	16: PB14 17: PB15 18: PC0 19: PC1	20: PC2 21: PC3 22: PC4 23: PC5	24: PC6 25: PC7 26: PC8 27: PC9	28: PC10 29: PC11 30: PD8 31: PD9	Wide timer 0 Capture Compare input / output channel 1.
WTIM0_CC2	0: PA4 1: PA5 2: PA6 3: PA7	4: PA8 5: PA9 6: PB6 7: PB7	8: PB8 9: PB9 10: PB10 11: PB11	12: PB12 13: PB13 14: PB14 15: PB15	16: PC0 17: PC1 18: PC2 19: PC3	20: PC4 21: PC5 22: PC6 23: PC7	24: PC8 25: PC9 26: PC10 27: PC11	28: PD8 29: PD9 30: PD10 31: PD11	Wide timer 0 Capture Compare input / output channel 2.
WTIM0_CDTI0	0: PA8 1: PA9 2: PB6 3: PB7	4: PB8 5: PB9 6: PB10 7: PB11	8: PB12 9: PB13 10: PB14 11: PB15	12: PC0 13: PC1 14: PC2 15: PC3	16: PC4 17: PC5 18: PC6 19: PC7	20: PC8 21: PC9 22: PC10 23: PC11	24: PD8 25: PD9 26: PD10 27: PD11	28: PD12 29: PD13 30: PD14 31: PD15	Wide timer 0 Complimentary Dead Time Insertion channel 0.
WTIM0_CDTI1	0: PB6 1: PB7 2: PB8 3: PB9	4: PB10 5: PB11 6: PB12 7: PB13	8: PB14 9: PB15 10: PC0 11: PC1	12: PC2 13: PC3 14: PC4 15: PC5	16: PC6 17: PC7 18: PC8 19: PC9	20: PC10 21: PC11 22: PD8 23: PD9	24: PD10 25: PD11 26: PD12 27: PD13	28: PD14 29: PD15 30: PF0 31: PF1	Wide timer 0 Complimentary Dead Time Insertion channel 1.
WTIM0_CDTI2	0: PB8 1: PB9 2: PB10 3: PB11	4: PB12 5: PB13 6: PB14 7: PB15	8: PC0 9: PC1 10: PC2 11: PC3	12: PC4 13: PC5 14: PC6 15: PC7	16: PC8 17: PC9 18: PC10 19: PC11	20: PD8 21: PD9 22: PD10 23: PD11	24: PD12 25: PD13 26: PD14 27: PD15	28: PF0 29: PF1 30: PF2 31: PF3	Wide timer 0 Complimentary Dead Time Insertion channel 2.
WTIM1_CC0	0: PB12 1: PB13 2: PB14 3: PB15	4: PC0 5: PC1 6: PC2 7: PC3	8: PC4 9: PC5 10: PC6 11: PC7	12: PC8 13: PC9 14: PC10 15: PC11	16: PD8 17: PD9 18: PD10 19: PD11	20: PD12 21: PD13 22: PD14 23: PD15	24: PF0 25: PF1 26: PF2 27: PF3	28: PF4 29: PF5 30: PF6 31: PF7	Wide timer 1 Capture Compare input / output channel 0.

Alternate	LOCATION								
Functionality	0 - 3	4 - 7	8 - 11	12 - 15	16 - 19	20 - 23	24 - 27	28 - 31	Description
WTIM1_CC1	0: PB14 1: PB15 2: PC0 3: PC1	4: PC2 5: PC3 6: PC4 7: PC5	8: PC6 9: PC7 10: PC8 11: PC9	12: PC10 13: PC11 14: PD8 15: PD9	16: PD10 17: PD11 18: PD12 19: PD13	20: PD14 21: PD15 22: PF0 23: PF1	24: PF2 25: PF3 26: PF4 27: PF5	28: PF6 29: PF7 30: PF8 31: PF9	Wide timer 1 Capture Compare input / output channel 1.
WTIM1_CC2	0: PC0 1: PC1 2: PC2 3: PC3	4: PC4 5: PC5 6: PC6 7: PC7	8: PC8 9: PC9 10: PC10 11: PC11	12: PD8 13: PD9 14: PD10 15: PD11	16: PD12 17: PD13 18: PD14 19: PD15	20: PF0 21: PF1 22: PF2 23: PF3	24: PF4 25: PF5 26: PF6 27: PF7	28: PF8 29: PF9 30: PF10 31: PF11	Wide timer 1 Capture Compare input / output channel 2.
WTIM1_CC3	0: PC2 1: PC3 2: PC4 3: PC5	4: PC6 5: PC7 6: PC8 7: PC9	8: PC10 9: PC11 10: PD8 11: PD9	12: PD10 13: PD11 14: PD12 15: PD13	16: PD14 17: PD15 18: PF0 19: PF1	20: PF2 21: PF3 22: PF4 23: PF5	24: PF6 25: PF7 26: PF8 27: PF9	28: PF10 29: PF11 30: PF12 31: PF13	Wide timer 1 Capture Compare input / output channel 3.

6.11 Analog Port (APORT) Client Maps

The Analog Port (APORT) is an infrastructure used to connect chip pins with on-chip analog clients such as analog comparators, ADCs, DACs, etc. The APORT consists of a set of shared buses, switches, and control logic needed to configurably implement the signal routing. Figure 6.9 APORT Connection Diagram on page 199 shows the APORT routing for this device family (note that available features may vary by part number). A complete description of APORT functionality can be found in the Reference Manual.

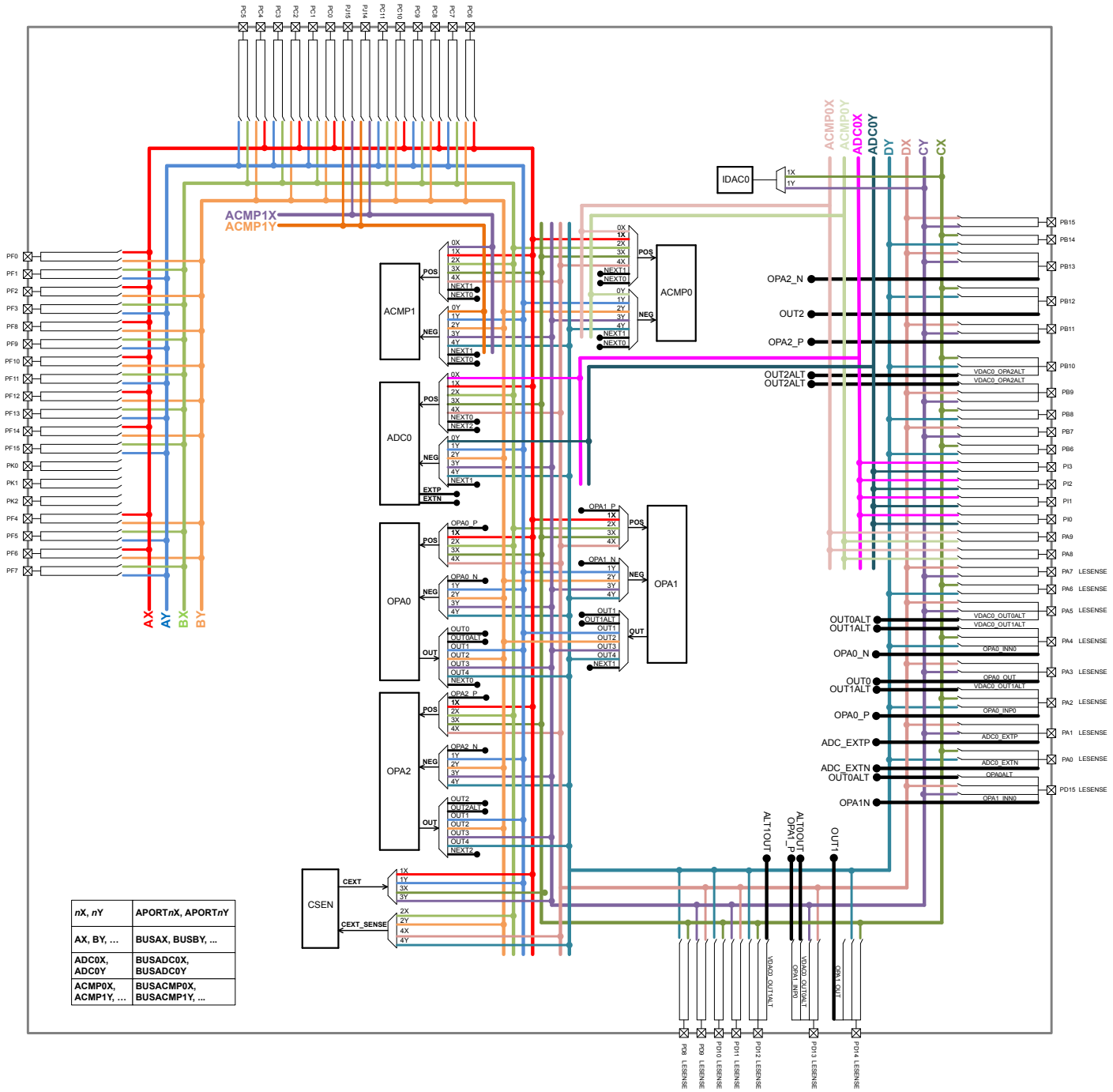

Figure 6.9. APORT Connection Diagram

Client maps for each analog circuit using the APORT are shown in the following tables. The maps are organized by bus, and show the peripheral's port connection, the shared bus, and the connection from specific bus channel numbers to GPIO pins.

In general, enumerations for the pin selection field in an analog peripheral's register can be determined by finding the desired pin connection in the table and then combining the value in the Port column (APORT__), and the channel identifier (CH__). For example, if pin

PF7 is available on port APORT2X as CH23, the register field enumeration to connect to PF7 would be APORT2XCH23. The shared bus used by this connection is indicated in the Bus column.

Table 6.11. ACMP0 Bus and Pin Mapping

Port	APORT4Y	APORT4X	APORT3Y	APORT3X	APORT2Y	APORT2X	APORT1Y	APORT1X	APORT0Y	APORT0X
Bus	BUSDY	BUSDX	BUSCY	BUSCX	BUSBY	BUSBX	BUSAY	BUSAX	BUSACMP0Y	BUSACMP0X
CH31		PB15	PB15			PF15	PF15			
CH30	PB14			PB14	PF14			PF14		
CH29		PB13	PB13			PF13	PF13			
CH28	PB12			PB12	PF12			PF12		
CH27		PB11	PB11			PF11	PF11			
CH26	PB10			PB10	PF10			PF10		
CH25		PB9	PB9			PF9	PF9			
CH24	PB8			PB8	PF8			PF8		
CH23		PB7	PB7			PF7	PF7			
CH22	PB6			PB6	PF6			PF6		
CH21						PF5	PF5			
CH20					PF4			PF4		
CH19						PF3	PF3			
CH18					PF2			PF2		
CH17						PF1	PF1			
CH16					PF0			PF0		
CH15		PA7	PA7							
CH14	PA6			PA6						
CH13		PA5	PA5							
CH12	PA4			PA4						
CH11		PA3	PA3			PC11	PC11			
CH10	PA2			PA2	PC10			PC10		
CH9		PA1	PA1			PC9	PC9			
CH8	PA0			PA0	PC8			PC8		
CH7		PD15	PD15			PC7	PC7			
CH6	PD14			PD14	PC6			PC6		
CH5		PD13	PD13			PC5	PC5			
CH4	PD12			PD12	PC4			PC4		
CH3		PD11	PD11			PC3	PC3			
CH2	PD10			PD10	PC2			PC2		
CH1		PD9	PD9			PC1	PC1		PA9	PA9
CH0	PD8			PD8	PC0			PC0	PA8	PA8

Table 6.12. ACMP1 Bus and Pin Mapping

APORT4Y	APORT4X	APORT3Y	APORT3X	APORT2Y	APORT2X	APORT1Y	APORT1X	APORT0Y	APORT0X	Port
BUSDY	BUSDX	BUSCY	BUSCX	BUSBY	BUSBX	BUSAY	BUSAX	BUSACMP1Y	BUSACMP1X	Bus
	PB15	PB15			PF15	PF15				CH31
PB14			PB14	PF14			PF14			CH30
	PB13	PB13			PF13	PF13				CH29
PB12			PB12	PF12			PF12			CH28
	PB11	PB11			PF11	PF11				CH27
PB10			PB10	PF10			PF10			CH26
	PB9	PB9			PF9	PF9				CH25
PB8			PB8	PF8			PF8			CH24
	PB7	PB7			PF7	PF7				CH23
PB6			PB6	PF6			PF6			CH22
					PF5	PF5				CH21
				PF4			PF4			CH20
					PF3	PF3				CH19
				PF2			PF2			CH18
					PF1	PF1				CH17
				PF0			PF0			CH16
	PA7	PA7								CH15
PA6			PA6							CH14
	PA5	PA5								CH13
PA4			PA4							CH12
	PA3	PA3			PC11	PC11				CH11
PA2			PA2	PC10			PC10			CH10
	PA1	PA1			PC9	PC9				CH9
PA0			PA0	PC8			PC8			CH8
	PD15	PD15			PC7	PC7		PJ15	PJ15	CH7
PD14			PD14	PC6			PC6	PJ14	PJ14	CH6
	PD13	PD13			PC5	PC5				CH5
PD12			PD12	PC4			PC4			CH4
	PD11	PD11			PC3	PC3				CH3
PD10			PD10	PC2			PC2			CH2
	PD9	PD9			PC1	PC1				CH1
PD8			PD8	PC0			PC0			CH0

Table 6.13. ADC0 Bus and Pin Mapping

APORT4Y	APORT4X	APORT3Y	APORT3X	APORT2Y	APORT2X	APORT1Y	APORT1X	APORT0Y	APORT0X	Port
BUSDY	BUSDX	BUSCY	BUSCX	BUSBY	BUSBX	BUSAY	BUSAX	BUSADC0Y	BUSADC0X	Bus
	PB15	PB15			PF15	PF15				CH31
PB14			PB14	PF14			PF14			CH30
	PB13	PB13			PF13	PF13				CH29
PB12			PB12	PF12			PF12			CH28
	PB11	PB11			PF11	PF11				CH27
PB10			PB10	PF10			PF10			CH26
	PB9	PB9			PF9	PF9				CH25
PB8			PB8	PF8			PF8			CH24
	PB7	PB7			PF7	PF7				CH23
PB6			PB6	PF6			PF6			CH22
					PF5	PF5				CH21
				PF4			PF4			CH20
					PF3	PF3				CH19
				PF2			PF2			CH18
					PF1	PF1				CH17
				PF0			PF0			CH16
	PA7	PA7								CH15
PA6			PA6							CH14
	PA5	PA5								CH13
PA4			PA4							CH12
	PA3	PA3			PC11	PC11				CH11
PA2			PA2	PC10			PC10			CH10
	PA1	PA1			PC9	PC9				CH9
PA0			PA0	PC8			PC8			CH8
	PD15	PD15			PC7	PC7				CH7
PD14			PD14	PC6			PC6			CH6
	PD13	PD13			PC5	PC5				CH5
PD12			PD12	PC4			PC4			CH4
	PD11	PD11			PC3	PC3		PI3	PI3	CH3
PD10			PD10	PC2			PC2	PI2	PI2	CH2
	PD9	PD9			PC1	PC1		PI1	PI1	CH1
PD8			PD8	PC0			PC0	PI0	PI0	CH0

Table 6.14. CSEN Bus and Pin Mapping

Port	Bus	CH31	CH30	CH29	CH28	CH27	CH26	CH25	CH24	CH23	CH22	CH21	CH20	CH19	CH18	CH17	CH16	CH15	CH14	CH13	CH12	CH11	CH10	CH9	CH8	CH7	CH6	CH5	CH4	CH3	CH2	CH1	CH0
CEXT																																	
APORT1X	BUSAX		PF14		PF12		PF10		PF8		PF6		PF4		PF2		PF0						PC10		PC8		PC6		PC4		PC2		PC0
APORT1Y	BUSAY	PF15		PF13		PF11		PF9		PF7		PF5		PF3		PF1						PC11		PC9		PC7		PC5		PC3		PC1	
APORT3X	BUSCX		PB14		PB12		PB10		PB8		PB6								PA6		PA4		PA2		PA0		PD14		PD12		PD10		PD8
APORT3Y	BUSCY	PB15		PB13		PB11		PB9		PB7								PA7		PA5		PA3		PA1		PD15		PD13		PD11		PD9	
CEXT_SENSE																																	
APORT2X	BUSBX	PF15		PF13		PF11		PF9		PF7		PF5		PF3		PF1						PC11		PC9		PC7		PC5		PC3		PC1	
APORT2Y	BUSBY		PF14		PF12		PF10		PF8		PF6		PF4		PF2		PF0						PC10		PC8		PC6		PC4		PC2		PC0
APORT4X	BUSDX	PB15		PB13		PB11		PB9		PB7								PA7		PA5		PA3		PA1		PD15		PD13		PD11		PD9	
APORT4Y	BUSDY		PB14		PB12		PB10		PB8		PB6								PA6		PA4		PA2		PA0		PD14		PD12		PD10		PD8

Table 6.15. IDAC0 Bus and Pin Mapping

Port	Bus	CH31	CH30	CH29	CH28	CH27	CH26	CH25	CH24	CH23	CH22	CH21	CH20	CH19	CH18	CH17	CH16	CH15	CH14	CH13	CH12	CH11	CH10	CH9	CH8	CH7	CH6	CH5	CH4	CH3	CH2	CH1	CH0
APORT1X	BUSCX		PB14		PB12		PB10		PB8		PB6								PA6		PA4		PA2		PA0		PD14		PD12		PD10		PD8
APORT1Y	BUSCY	PB15		PB13		PB11		PB9		PB7								PA7		PA5		PA3		PA1		PD15		PD13		PD11		PD9	

Table 6.16. VDAC0 / OPA Bus and Pin Mapping

Port	OPA0_N				OPA0_P				
Bus	APORT1Y	APORT2Y	APORT3Y	APORT4Y	APORT1X	APORT2X	APORT3X	APORT4X
	BUSAY	BUSBY	BUSCY	BUSDY	BUSAX	BUSBX	BUSCX	BUSDX
CH31	PF15		PB15			PF15		PB15
CH30		PF14		PB14	PF14		PB14	
CH29	PF13		PB13			PF13		PB13
CH28		PF12		PB12	PF12		PB12	
CH27	PF11		PB11			PF11		PB11
CH26		PF10		PB10	PF10		PB10	
CH25	PF9		PB9			PF9		PB9
CH24		PF8		PB8	PF8		PB8	
CH23	PF7		PB7			PF7		PB7
CH22		PF6		PB6	PF6		PB6	
CH21	PF5					PF5		
CH20		PF4			PF4			
CH19	PF3					PF3		
CH18		PF2			PF2			
CH17	PF1					PF1		
CH16		PF0			PF0			
CH15			PA7					PA7
CH14				PA6			PA6	
CH13			PA5					PA5
CH12				PA4			PA4	
CH11	PC11		PA3			PC11		PA3
CH10		PC10		PA2	PC10		PA2	
CH9	PC9		PA1			PC9		PA1
CH8		PC8		PA0	PC8		PA0	
CH7	PC7		PD15			PC7		PD15
CH6		PC6		PD14	PC6		PD14	
CH5	PC5		PD13			PC5		PD13
CH4		PC4		PD12	PC4		PD12	
CH3	PC3		PD11			PC3		PD11
CH2		PC2		PD10	PC2		PD10	
CH1	PC1		PD9			PC1		PD9
CH0		PC0		PD8	PC0		PD8	

Port	OPA1_N	OPA1_P	OPA2_N
Bus	APORT1Y BUSAY	APORT1X BUSAX	APORT1Y BUSAY
CH31	PF15		PF15
CH30	PF14	PF14	PF14
CH29	PF13	PF13	PF13
CH28	PF12	PF12	PF12
CH27	PF11	PF11	PF11
CH26	PF10	PF10	PF10
CH25	PF9	PF9	PF9
CH24	PF8	PF8	PF8
CH23	PF7	PF7	PF7
CH22	PF6	PF6	PF6
CH21	PF5	PF5	PF5
CH20	PF4	PF4	PF4
CH19	PF3	PF3	PF3
CH18	PF2	PF2	PF2
CH17	PF1	PF1	PF1
CH16	PF0	PF0	PF0
CH15	PA7	PA7	PA7
CH14	PA6	PA6	PA6
CH13	PA5	PA5	PA5
CH12	PA4	PA4	PA4
CH11	PC11	PC11	PC11
CH10	PC10	PC10	PC10
CH9	PC9	PC9	PC9
CH8	PC8	PC8	PC8
CH7	PC7	PC7	PC7
CH6	PC6	PC6	PC6
CH5	PC5	PC5	PC5
CH4	PC4	PC4	PC4
CH3	PC3	PC3	PC3
CH2	PC2	PC2	PC2
CH1	PC1	PC1	PC1
CH0	PC0	PC0	PC0

OPA1_N				OPA1_P				OPA2_N			
APORT4Y BUSDY	APORT3Y BUSCY	APORT2Y BUSBY	APORT1Y BUSAY	APORT4X BUSDX	APORT3X BUSCX	APORT2X BUSBX	APORT1X BUSAX	APORT4Y BUSDY	APORT3Y BUSCY	APORT2Y BUSBY	APORT1Y BUSAY
	PB15		PF15	PB15		PF15			PB15		PF15
PB14		PF14			PB14		PF14	PB14		PF14	
	PB13		PF13	PB13		PF13			PB13		PF13
PB12		PF12			PB12		PF12	PB12		PF12	
	PB11		PF11	PB11		PF11			PB11		PF11
PB10		PF10			PB10		PF10	PB10		PF10	
	PB9		PF9	PB9		PF9			PB9		PF9
PB8		PF8			PB8		PF8	PB8		PF8	
	PB7		PF7	PB7		PF7			PB7		PF7
PB6		PF6			PB6		PF6	PB6		PF6	
			PF5			PF5					PF5
		PF4					PF4			PF4	
			PF3			PF3					PF3
		PF2					PF2			PF2	
			PF1			PF1					PF1
		PF0					PF0			PF0	
	PA7			PA7					PA7		
PA6					PA6			PA6			
	PA5			PA5					PA5		
PA4					PA4			PA4			
	PA3		PC11	PA3		PC11			PA3		PC11
PA2		PC10			PA2		PC10	PA2		PC10	
	PA1		PC9	PA1		PC9			PA1		PC9
PA0		PC8			PA0		PC8	PA0		PC8	
	PD15		PC7	PD15		PC7			PD15		PC7
PD14		PC6			PD14		PC6	PD14		PC6	
	PD13		PC5	PD13		PC5			PD13		PC5
PD12		PC4			PD12		PC4	PD12		PC4	
	PD11		PC3	PD11		PC3			PD11		PC3
PD10		PC2			PD10		PC2	PD10		PC2	
	PD9		PC1	PD9		PC1			PD9		PC1
PD8		PC0			PD8		PC0	PD8		PC0	

Port	Bus	CH31	CH30	CH29	CH28	CH27	CH26	CH25	CH24	CH23	CH22	CH21	CH20	CH19	CH18	CH17	CH16	CH15	CH14	CH13	CH12	CH11	CH10	CH9	CH8	CH7	CH6	CH5	CH4	CH3	CH2	CH1	CH0
OPA2_OUT	APORT4Y																																
	APORT3Y		PB15																														
	APORT2Y			PF14																													
	APORT1Y	PF15			PF13																												
OPA2_P	APORT4X																																
	APORT3X																																
	APORT2X																																
	APORT1X																																
VDAC0_OUT0 / OPA0_OUT	APORT4X																																
	APORT3X																																
	APORT2X																																
	APORT1X																																
	APORT4Y																																
	APORT3Y		PB15		PF15																												
	APORT2Y			PF14																													
	APORT1Y	PF15			PF13																												
	BUSDX	PB15				PB13				PB11				PB9				PB7				PA7				PA5				PA3			
	BUSCX		PB14				PB12				PB10				PB8				PB6				PA6				PA4				PA2		
	BUSBX	PF15			PF13			PF11				PF9				PF7				PF5		PC11				PC9				PC7			
	BUSAX		PF14			PF12			PF10				PF8				PF6				PF4		PC10				PC8				PC6		
	BUSDY			PB14				PB12				PB10				PB8				PB6				PA6				PA4				PA2	
	BUSCY		PB15				PB13				PB11				PB9				PB7				PA7				PA5				PA3		
	BUSBY			PF14				PF12				PF10				PF8				PF6				PC10				PC8				PC6	
	BUSAY	PF15			PF13				PF11				PF9				PF7				PF5	PC11				PC9				PC7			

Port	Bus				
CH31		PF15		PB15	
CH30	PF14		PB14		
CH29		PF13		PB13	
CH28	PF12		PB12		
CH27		PF11		PB11	
CH26	PF10		PB10		
CH25		PF9		PB9	
CH24	PF8		PB8		
CH23		PF7		PB7	
CH22	PF6		PB6		
CH21		PF5			
CH20	PF4				
CH19		PF3			
CH18	PF2				
CH17		PF1			
CH16	PF0				
CH15				PA7	
CH14			PA6		
CH13				PA5	
CH12			PA4		
CH11		PC11		PA3	
CH10	PC10		PA2		
CH9		PC9		PA1	
CH8	PC8		PA0		
CH7		PC7		PD15	
CH6	PC6		PD14		
CH5		PC5		PD13	
CH4	PC4		PD12		
CH3		PC3		PD11	
CH2	PC2		PD10		
CH1		PC1		PD9	
CH0	PC0		PD8		

VDAC0_OUT1 / OPA1_OUT	APORT1Y	APORT2Y	APORT3Y	APORT4Y
	BUSAY	BUSBY	BUSCY	BUSDY

7. BGA125 Package Specifications

7.1 BGA125 Package Dimensions

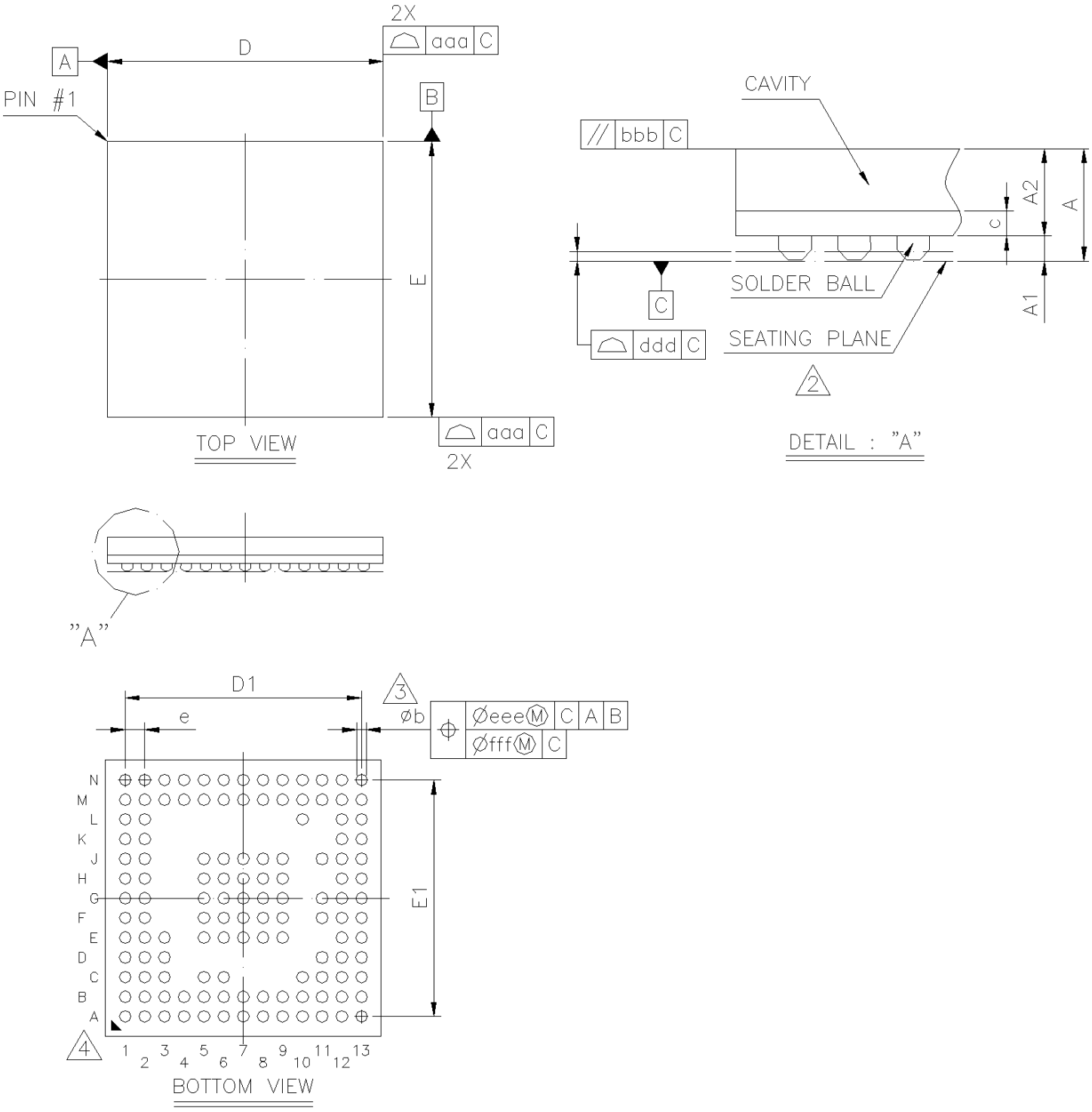

Figure 7.1. BGA125 Package Drawing

Table 7.1. BGA125 Package Dimensions

Dimension	Min	Typ	Max
A	0.80	0.87	0.94
A1	0.16	0.21	0.26
A2	0.61	0.66	0.71
c	0.17	0.21	0.25
D	6.90	7.00	7.10
E	6.90	7.00	7.10
D1	—	6.00	—
E1	—	6.00	—
e	—	0.50	—
b	0.25	0.30	0.35
aaa	0.10		
bbb	0.10		
ddd	0.08		
eee	0.15		
fff	0.05		

Note:
1. All dimensions shown are in millimeters (mm) unless otherwise noted.
2. Dimensioning and Tolerancing per ANSI Y14.5M-1994.

7.2 BGA125 PCB Land Pattern

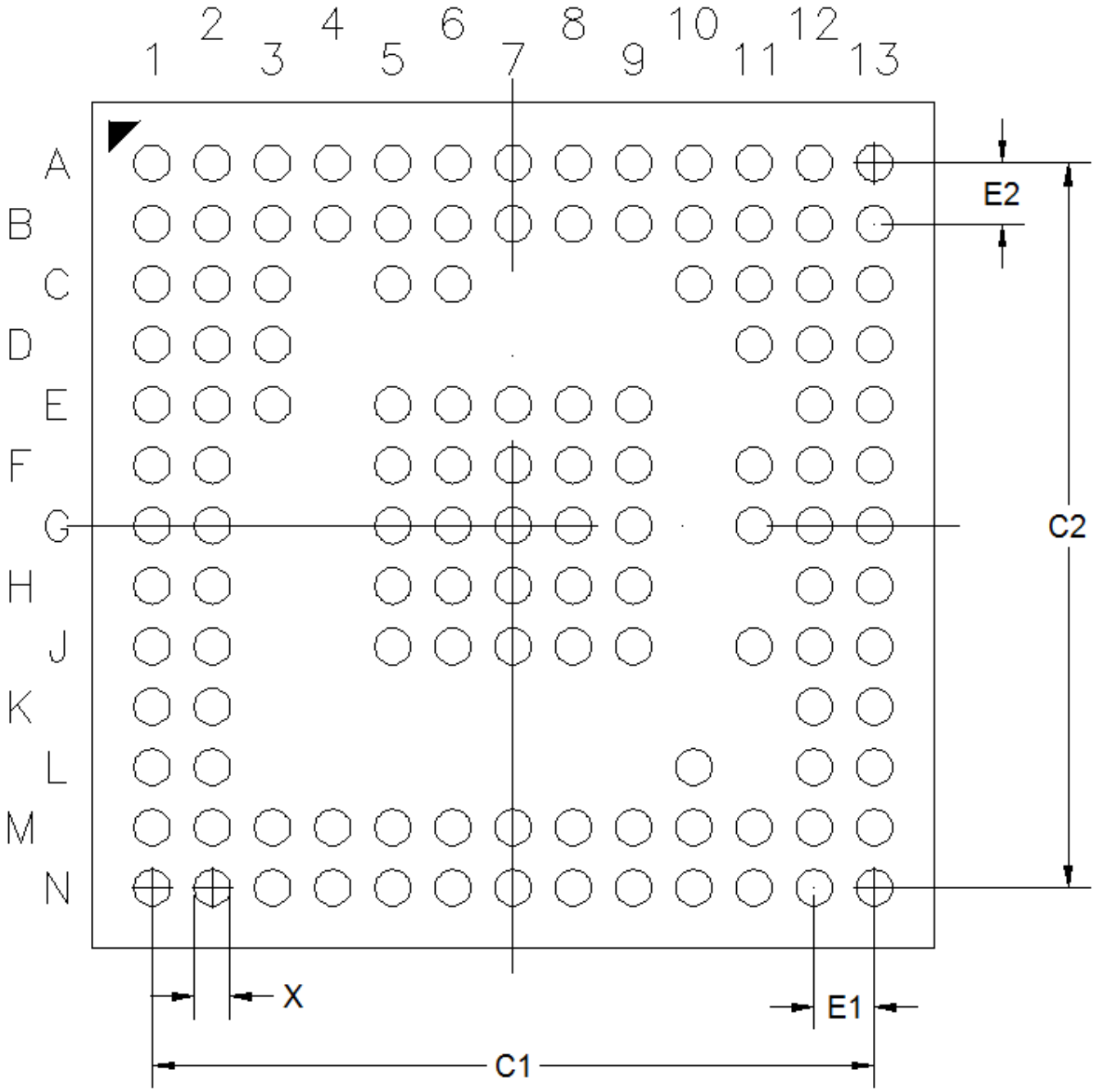

Figure 7.2. BGA125 PCB Land Pattern Drawing

Table 7.2. BGA125 PCB Land Pattern Dimensions

Dimension	Min	Nom	Max
X		0.25	
C1		6.00	
C2		6.00	
E1		0.5	
E2		0.5	

Note:

1. All dimensions shown are in millimeters (mm) unless otherwise noted.
2. Dimensioning and Tolerancing per ANSI Y14.5M-1994.
3. This Land Pattern Design is based on the IPC-7351 guidelines.
4. All metal pads are to be non-solder mask defined (NSMD). Clearance between the solder mask and the metal pad is to be 60 µm minimum, all the way around the pad.
5. A stainless steel, laser-cut and electro-polished stencil with trapezoidal walls should be used to assure good solder paste release.
6. The stencil thickness should be 0.125 mm (5 mils).
7. The ratio of stencil aperture to land pad size should be 1:1.
8. A No-Clean, Type-3 solder paste is recommended.
9. The recommended card reflow profile is per the JEDEC/IPC J-STD-020C specification for Small Body Components.

7.3 BGA125 Package Marking

Figure 7.3. BGA125 Package Marking

The package marking consists of:

- PPPPPPPPP – The part number designation.
  1. Family Code (B | M | F)
  2. G (Gecko)
  3. Series (1, 2,...)
  4. Device Configuration (1, 2,...)
  5. Performance Grade (P | B | V)
  6. Feature Code (1, 2,...)
  7. TRX Code (3 = TXRX | 2= RX | 1 = TX)
  8. Band (1 = Sub-GHz | 2 = 2.4 GHz | 3 = Dual-band)
  9. Flash (J = 1024K | H = 512K | G = 256K | F = 128K | E = 64K | D = 32K)
  10. Temperature Grade (G = -40 to 85 | I = -40 to 125)
- YY – The last 2 digits of the assembly year.
- WW – The 2-digit workweek when the device was assembled.
- TTTTTT – A trace or manufacturing code. The first letter is the device revision.

8. QFN48 Package Specifications

8.1 QFN48 Package Dimensions

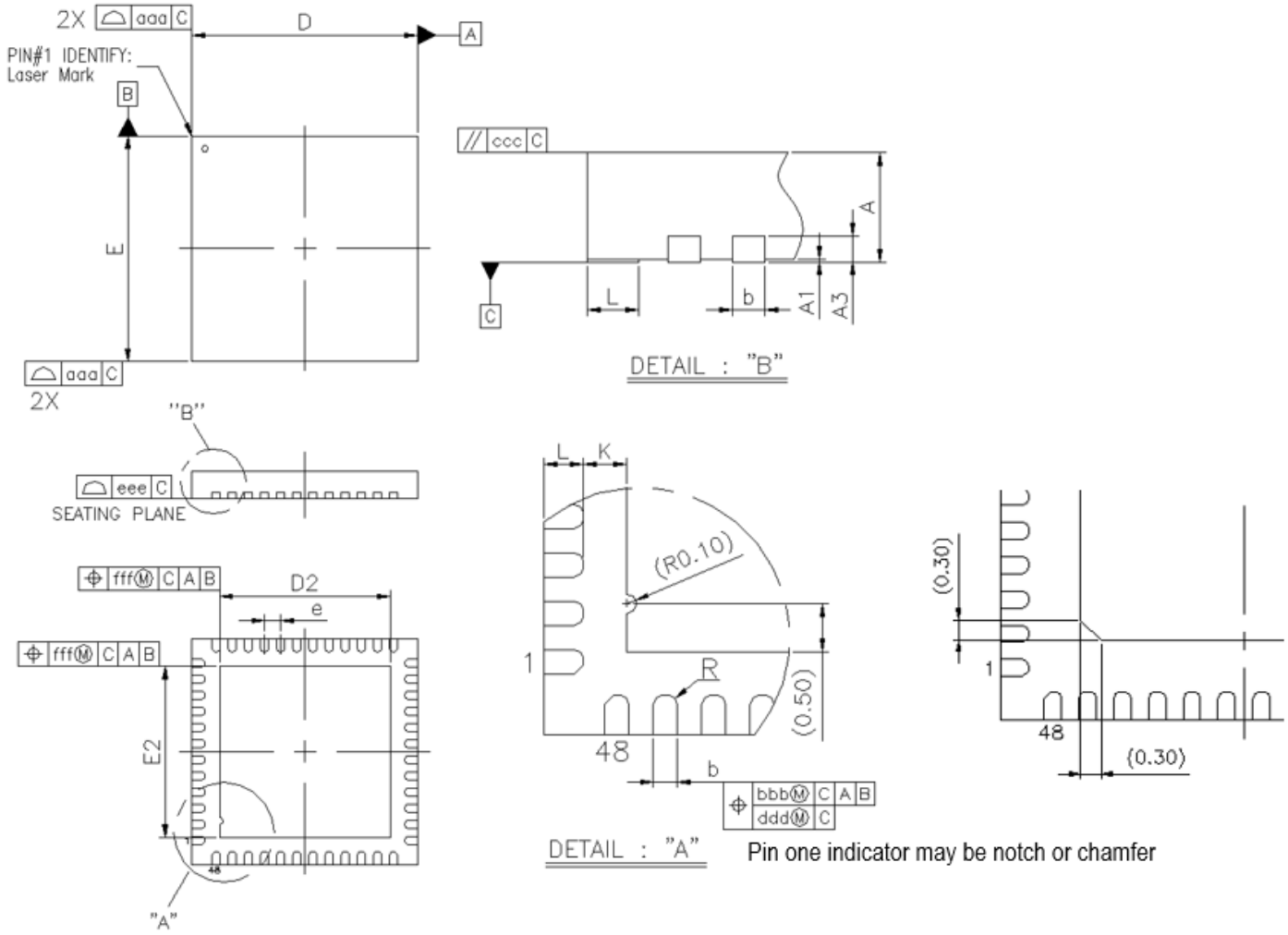

Figure 8.1. QFN48 Package Drawing

Table 8.1. QFN48 Package Dimensions

Dimension	Min	Typ	Max
A	0.80	0.85	0.90
A1	0.00	0.02	0.05
A3		0.20 REF	
b	0.18	0.25	0.30
D	6.90	7.00	7.10
E	6.90	7.00	7.10
D2	5.15	5.30	5.45
E2	5.15	5.30	5.45
e		0.50 BSC	
L	0.30	0.40	0.50
K	0.20	—	—
R	0.09	—	—
aaa		0.15	
bbb		0.10	
ccc		0.10	
ddd		0.05	
eee		0.08	
fff		0.10	

Note:

1. All dimensions shown are in millimeters (mm) unless otherwise noted.
2. Dimensioning and Tolerancing per ANSI Y14.5M-1994.
3. This drawing conforms to the JEDEC Solid State Outline MO-220, Variation VKKD-4.
4. Recommended card reflow profile is per the JEDEC/IPC J-STD-020 specification for Small Body Components.

8.2 QFN48 PCB Land Pattern

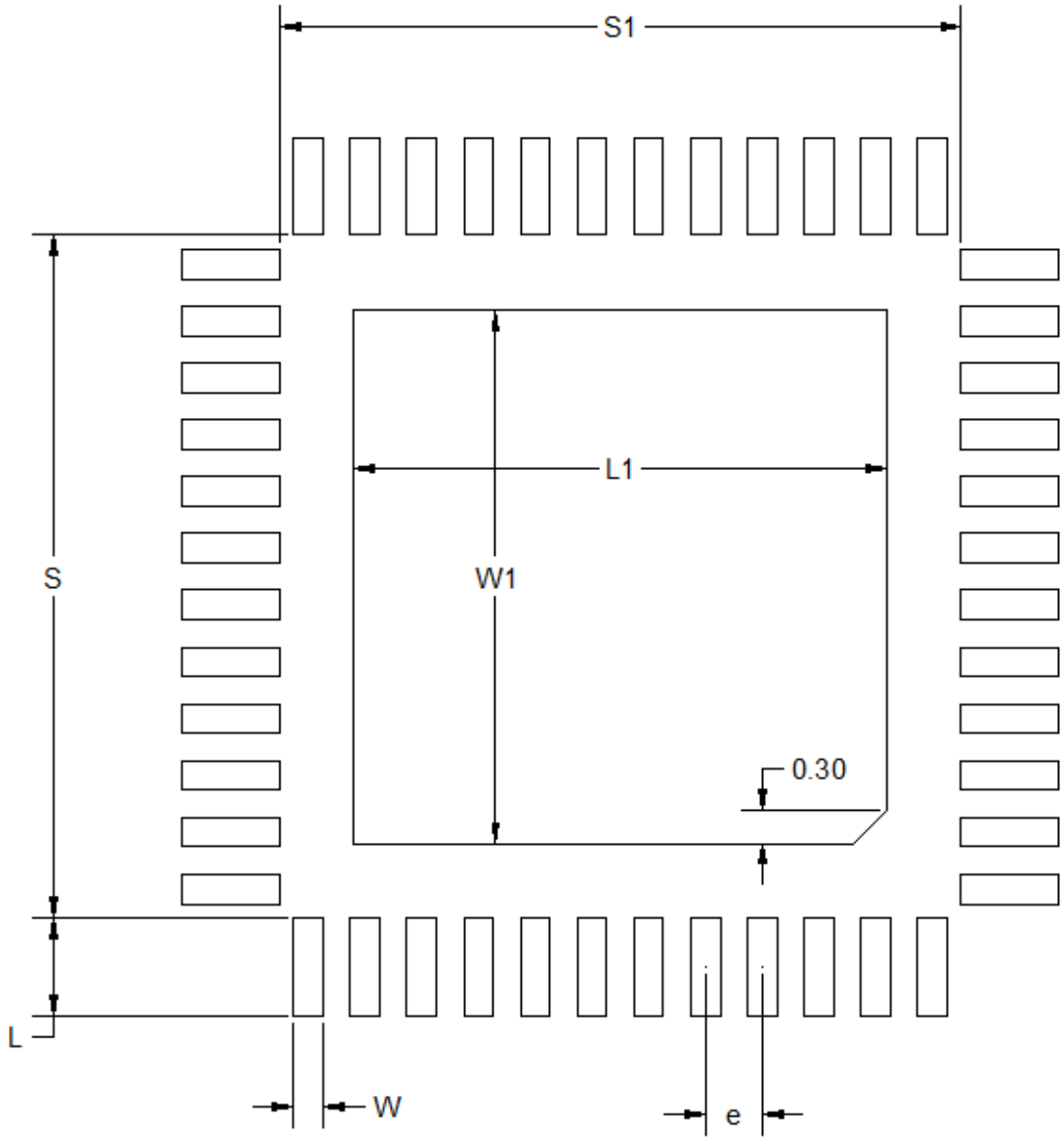

Figure 8.2. QFN48 PCB Land Pattern Drawing

Table 8.2. QFN48 PCB Land Pattern Dimensions

Dimension	Typ
S1	6.01
S	6.01
L1	4.70
W1	4.70
e	0.50
W	0.26
L	0.86

Note:

1. All dimensions shown are in millimeters (mm) unless otherwise noted.
2. This Land Pattern Design is based on the IPC-7351 guidelines.
3. All metal pads are to be non-solder mask defined (NSMD). Clearance between the solder mask and the metal pad is to be 60 µm minimum, all the way around the pad.
4. A stainless steel, laser-cut and electro-polished stencil with trapezoidal walls should be used to assure good solder paste release.
5. The stencil thickness should be 0.125 mm (5 mils).
6. The ratio of stencil aperture to land pad size can be 1:1 for all perimeter pads.
7. A 4x4 array of 0.75 mm square openings on a 1.00 mm pitch can be used for the center ground pad.
8. A No-Clean, Type-3 solder paste is recommended.
9. The recommended card reflow profile is per the JEDEC/IPC J-STD-020 specification for Small Body Components.

8.3 QFN48 Package Marking

Figure 8.3. QFN48 Package Marking

The package marking consists of:

- PPPPPPPPP – The part number designation.
  1. Family Code (B | M | F)
  2. G (Gecko)
  3. Series (1, 2,...)
  4. Device Configuration (1, 2,...)
  5. Performance Grade (P | B | V)
  6. Feature Code (1, 2,...)
  7. TRX Code (3 = TXRX | 2 = RX | 1 = TX)
  8. Band (1 = Sub-GHz | 2 = 2.4 GHz | 3 = Dual-band)
  9. Flash (J = 1024K | H = 512K | G = 256K | F = 128K | E = 64K | D = 32K)
  10. Temperature Grade (G = -40 to 85 | I = -40 to 125)
- YY – The last 2 digits of the assembly year.
- WW – The 2-digit workweek when the device was assembled.
- TTTTTT – A trace or manufacturing code. The first letter is the device revision.

9. QFN68 Package Specifications

9.1 QFN68 Package Dimensions

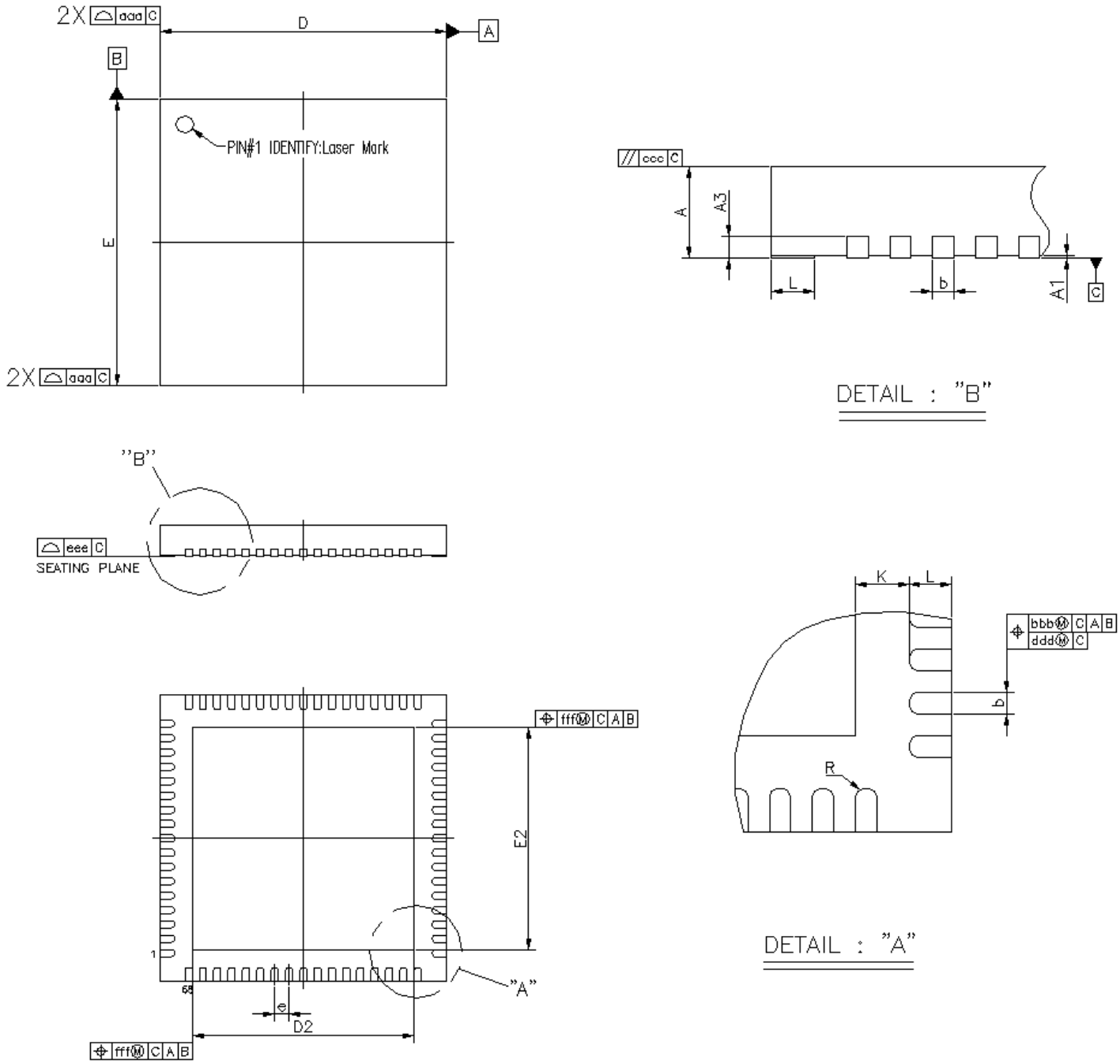

Figure 9.1. QFN68 Package Drawing

Table 9.1. QFN68 Package Dimensions

Dimension	Min	Typ	Max
A	0.80	0.85	0.90
A1	0.00	0.02	0.05
A3		0.20 REF	
b	0.15	0.20	0.25
D	7.90	8.00	8.10
E	7.90	8.00	8.10
D2	6.05	6.20	6.35
E2	6.05	6.20	6.35
e		0.40 BSC	
L	0.30	0.40	0.50
K	0.20	—	—
R	0.075	—	—
aaa		0.10	
bbb		0.07	
ccc		0.10	
ddd		0.05	
eee		0.08	
fff		0.10	

Note:

1. All dimensions shown are in millimeters (mm) unless otherwise noted.
2. Dimensioning and Tolerancing per ANSI Y14.5M-1994.
3. This drawing conforms to the JEDEC Solid State Outline MO-220, Variation VKKD-4.
4. Recommended card reflow profile is per the JEDEC/IPC J-STD-020 specification for Small Body Components.

9.2 QFN68 PCB Land Pattern

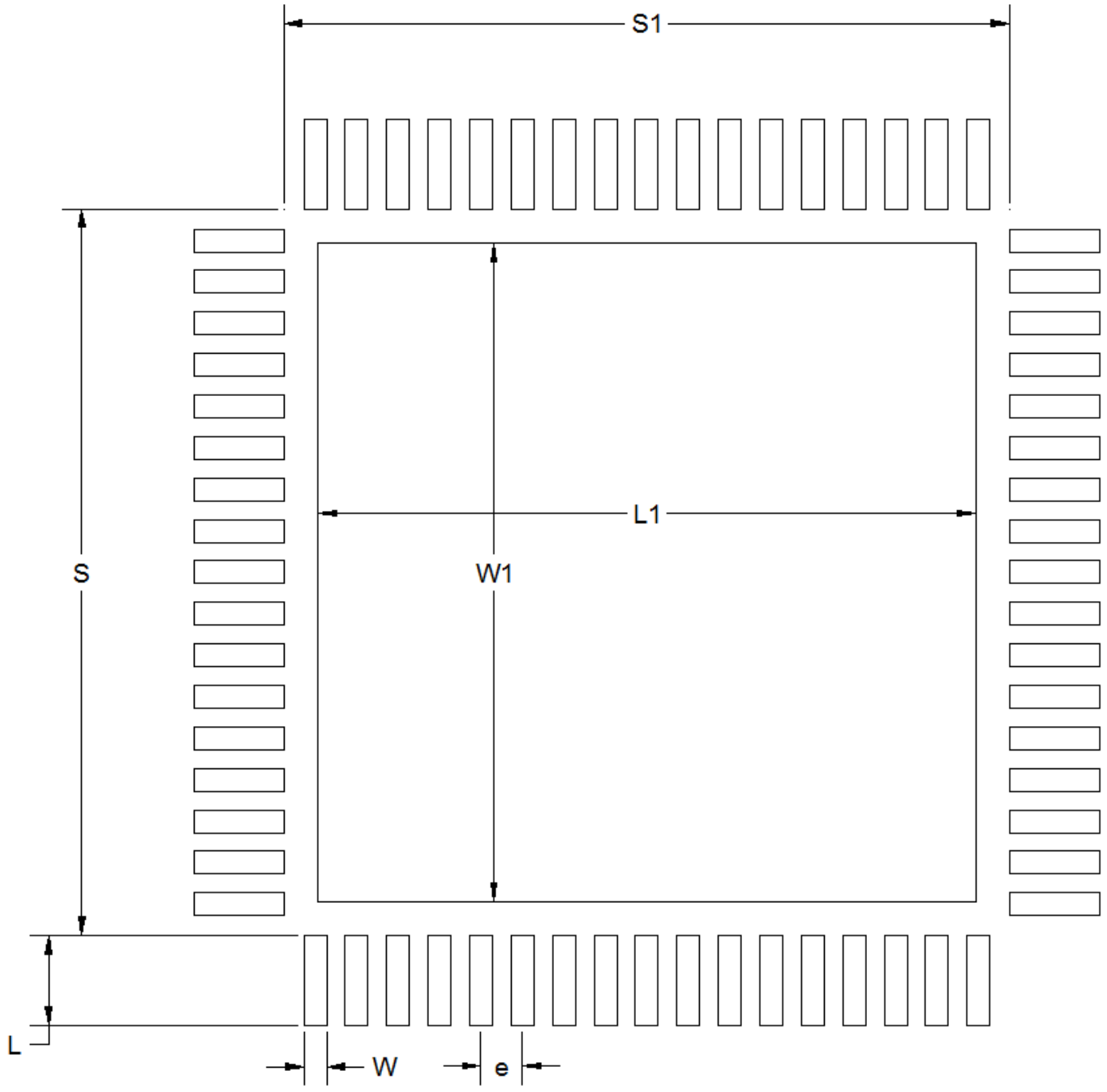

Figure 9.2. QFN68 PCB Land Pattern Drawing

Table 9.2. QFN68 PCB Land Pattern Dimensions

Dimension	Typ
L	0.86
W	0.22
e	0.40
S	7.01
S1	7.01
L1	6.35
W1	6.35

Note:

1. All dimensions shown are in millimeters (mm) unless otherwise noted.
2. This Land Pattern Design is based on the IPC-7351 guidelines.
3. All dimensions shown are at Maximum Material Condition (MMC). Least Material Condition (LMC) is calculated based on a Fabrication Allowance of 0.05mm.
4. All metal pads are to be non-solder mask defined (NSMD). Clearance between the solder mask and the metal pad is to be 60 µm minimum, all the way around the pad.
5. A stainless steel, laser-cut and electro-polished stencil with trapezoidal walls should be used to assure good solder paste release.
6. The stencil thickness should be 0.100 mm (4 mils).
7. The ratio of stencil aperture to land pad size can be 1:1 for all pads.
8. A 3x3 array of 1.50 mm square openings on a 1.80 mm pitch can be used for the center ground pad.
9. A No-Clean, Type-3 solder paste is recommended.
10. The recommended card reflow profile is per the JEDEC/IPC J-STD-020 specification for Small Body Components.

9.3 QFN68 Package Marking

Figure 9.3. QFN68 Package Marking

The package marking consists of:

- PPPPPPPPPP – The part number designation.
- TTTTTT – A trace or manufacturing code. The first letter is the device revision.
- YY – The last 2 digits of the assembly year.
- WW – The 2-digit workweek when the device was assembled.

10. Revision History

Revision 1.6

September, 2020

- Updated External PA supply connection conditions for $SPUR_{HARM_ETSI}$ and $SPUR_{OOB_ETSI}$ in section 4.1.10.3 Sub-GHz RF Transmitter characteristics for 868 MHz Band.

Revision 1.5

December, 2019

- In the front page block diagram, updated the lowest energy mode for LETIMER.
- Updated 3.6.4 Low Energy Timer (LETIMER) lowest energy mode.
- In 5.2 RF Matching Networks, corrected document references for component values and added document reference to IPD solutions.
- Corrected the max value of the Absolute voltage on 2G4RF_IOP, 2G4RF_ION, SUBGRF_OP and SUBGRF_ON pins in Absolute Maximum Ratings table in 4.1.1 Absolute Maximum Ratings.
- Added a Note about the operating voltage in 3.8.3 True Random Number Generator (TRNG).

Revision 1.4

July, 2019

- In Feature List, removed wake on radio.
- In System Overview:
  - Replaced reference to "modules" with "peripherals" or "blocks"
  - Renamed GPCRC section
- In Electrical Specifications, reordered footnotes according to order of appearance in the table.
- In General Operating Conditions for f_{CORE} :
  - Added conditions for all usable wait state settings
  - Corrected maximum specification from 20 MHz to 7 MHz for test condition VSCALE0, MODE = WS0
- In sub-GHz specifications, replaced references to "PAVDD" with "External PA Supply" for clarity.
- In RF Transmitter Characteristics for 802.15.4 DSSS-OQPSK in the 2.4GHz Band, updated parameter for EVM.
- In Sub-GHz RF Transmitter characteristics for 915 MHz Band:
  - Corrected test conditions for:
    - $SPUR_{HARM_FCC_14}$, in non-restricted bands
    - $SPUR_{OOB_FCC_14}$, in non-restricted bands
    - $SPUR_{HARM_FCC_20}$, in non-restricted bands
    - $SPUR_{OOB_FCC_20}$, in non-restricted bands
  - Updated typical specification from -52 dBm to -62 dBm and maximum specification from -46 dBm to -56 dBm for:
    - $SPUR_{OOB_FCC_20}$, in restricted bands (30-88 MHz)
    - $SPUR_{OOB_FCC_14}$, in restricted bands (30-88 MHz)
  - Added footnote to PSD.
- In 4.1.10.2 Sub-GHz RF Receiver Characteristics for 915 MHz Band, updated typical specification from -60 dBm to -61 dBm and maximum specification from -54 dBm to -55 dBm for $SPUR_{RX_ARIB}$, 930-1000 MHz, RBW=100 kHz.
- Corrected units for F_{RANGE} in:
  - Sub-GHz RF Receiver Characteristics for 490 MHz Band
  - Sub-GHz RF Receiver Characteristics for 315 MHz Band
  - Sub-GHz RF Receiver Characteristics for 169 MHz Band
- In LFRCO, updated test conditions for f_{LFRCO}.
- In GPIO, added footnotes to V_{IL} and V_{IH}.
- In VMON, updated test conditions for I_{VMON}.
- In VDAC, updated test conditions for I_{DAC}, 200 Hz refresh rate.
- In CSEN, updated test conditions for:
  - C_{EXTMAX}
  - I_{CSEN_BOND}
  - I_{CSEN_EM2}
  - I_{CSEN_ACTIVE}
- In Pin Definitions, updated pin descriptions for DECOUPLE and RESETn.
- Updated feature code in:
  - 7.3 BGA125 Package Marking
  - 8.3 QFN48 Package Marking

Revision 1.3

June, 2018

- 4.1.5.4 Current Consumption Using Radio 3.3 V with DC-DC: Updated typical 802.15.4 receive current specifications.
- Table 6.9 GPIO Functionality Table on page 141: Changed presentation to order table by pin name instead of pin location.

Revision 1.2

February, 2018

- Added new orderable part numbers for QFN68 variants and associated packaging and pinout information.
- **Absolute Maximum Ratings Table**: Added footnote to clarify IOVDD over-voltage operation conditions.
- **APORT Connection Diagram**: Corrected OPA output connections to route through "Y" buses.

Revision 1.1

October, 2017

- Updated **Ordering Table** to revision-C OPNs.
- Added high-temperature part numbers to **Ordering Table** and added associated specifications / content throughout document.
- Updated product highlights on **Front Page** and **Feature List** for consistency across EFR32xG1x family documentation.
- **System Overview Updates**
  - Expanded Receiver Architecture section.
  - Clarified / corrected energy mode mentions in RTCC and Opamp sections.
  - Memory maps updated with LE peripherals and new formatting.
- **Absolute Maximum Ratings** Table:
  - Removed redundant I_{VSSMAX} line.
  - Added footnote to clarify V_{DIGPIN} specification for 5V tolerant GPIO.
- **General Operating Conditions** Table:
  - Removed redundant footnote about shorting VREGVDD and AVDD together.
  - Added footnote about IOVDD voltage restriction when CSEN peripheral is used with chopping enabled.
  - Added footnote for additional information on peak current during voltage scaling operations.
- **RF Receiver Characteristics for 2GFSK in the 2.4GHz Band, 1 Mbps Data Rate** Table:
  - Sensitivity, Co-channel interferer and Selectivity typical numbers updated to latest phy characterization data.
  - $BLOCK_{OOB}$ specifications changed to show Min values instead of Typ.
- **RF Receiver Characteristics for 2GFSK in the 2.4GHz Band, 2 Mbps Data Rate** Table:
  - SAT Typical value corrected from 5 to 10 dBm.
  - $BLOCK_{OOB}$ specifications removed.
- **RF Receiver Characteristics for 802.15.4 DSSS-OQPSK in the 2.4 GHz Band** Table: Footnote added to $BLOCK_{80211G}$ specification to clarify blocker signal definition.
- **Sub-GHz RF Receiver Characteristics for 915 MHz Band** Table: Added O-QPSK DSSS phy specifications.
- **Sub-GHz RF Transmitter Characteristics for 868 MHz Band** Table: $SPUR_{OOB_ETSI}$ below 1 GHz Typ corrected from -60 to -42 dBm.
- **Sub-GHz RF Receiver Characteristics for 490 MHz Band** Table: Corrected 10 kbps 2GFSK reference signal bandwidth to 20.038 kHz.
- **Flash Memory Characteristics** Table:
  - Added timing measurement clarification for Device Erase and Mass Erase.
  - Device Erase Time typical values corrected from 69 to 82 ms.
- **Analog to Digital Converter (ADC)** Table:
  - Added header text for general specification conditions.
  - Added footnote for clarification of input voltage limits.
- **Digital to Analog Converter (VDAC)** Table: Gain Error min/max specifications relaxed for REFSEL on 1V25LN, VDD, and EXT settings.
- **Current Digital to Analog Converter (IDAC)** Table: Total accuracy STEPSEL value setting corrected from 0x80 to 0x10.
- **Analog Port (APORT)** Table: Operation in EM2/EM3 supply current changed from 915 to 67 nA (silicon fix from rev B to C).
- **2.4 GHz RF Transmitter Output Power** Figure: Extended temperature range to 125 C.
- **2.4 GHz RF Receiver Sensitivity** Figure: Updated with latest characterization data and added 125 C operational plots.
- **Typical Sub-GHz Impedance-matching network circuits** Figure: Corrected split between two examples from 450 MHz to 500 MHz.
- Minor typographical corrections, including capitalization, mis-spellings and punctuation marks, throughout document.
- Minor formatting and styling updates, including table formats, TOC location, and boilerplate information throughout document.

Revision 1.0

2017-04-14

- Added Thermal Characteristics table.
- Finalized specification tables. All tables were updated with latest characterization data and production test limits.
- Updated typical performance graphs for DC-DC.
- Minor typographical, clarity, and consistency improvements.
- Condensed pin function tables with new formatting.

Revision 0.6

2017-02-23

- Updated 2 Mbps 2GFSK receiver specifications with latest characteriztion data.
- Added table-wide conditions to 2GFSK 1 Mbps and 2 Mbps receiver tables.
- Clarified opamp noise measurement conditions in electrical spec table.

Revision 0.5

2017-02-03

- New corporate stylesheet applied.
- Updated device block diagrams on front page and in System Overview.
- Updated Feature List with latest characterization numbers.
- "Bluetooth Smart" changed to "Bluetooth Low Energy" throughout document.
- All OPNs changed to revision B.
- Minor typographical corrections and clarifications in System Overview.
- Electrical Characteristics Table Changes
  - All specification tables updated with latest characterization data and production test limits.
  - Split 2.4 GHz 2GFSK tables into separate tables for 1 Mbps and 2 Mbps data rates.
  - Split HFRCO/AUXHFRCO table into separate tables for HFRCO and AUXHFRCO.
  - OPAMP, CSEN, and VDAC specification line items updated to match test conditions.
  - Added tables for Analog Port (APORT) and Pulse Counter (PCNT).
- Added Typical Performance Curves for supply current, DCDC, and RF parameters.
- Added missing alternate functions and descriptions to Pinout and Alternate Function tables.
- Added APORT Connection Diagram.
- Corrected Package Marking description for QFN48 and BGA125.
- Corrected Package Marking diagram for QFN48.

Revision 0.2

2016-09-21

Initial release.

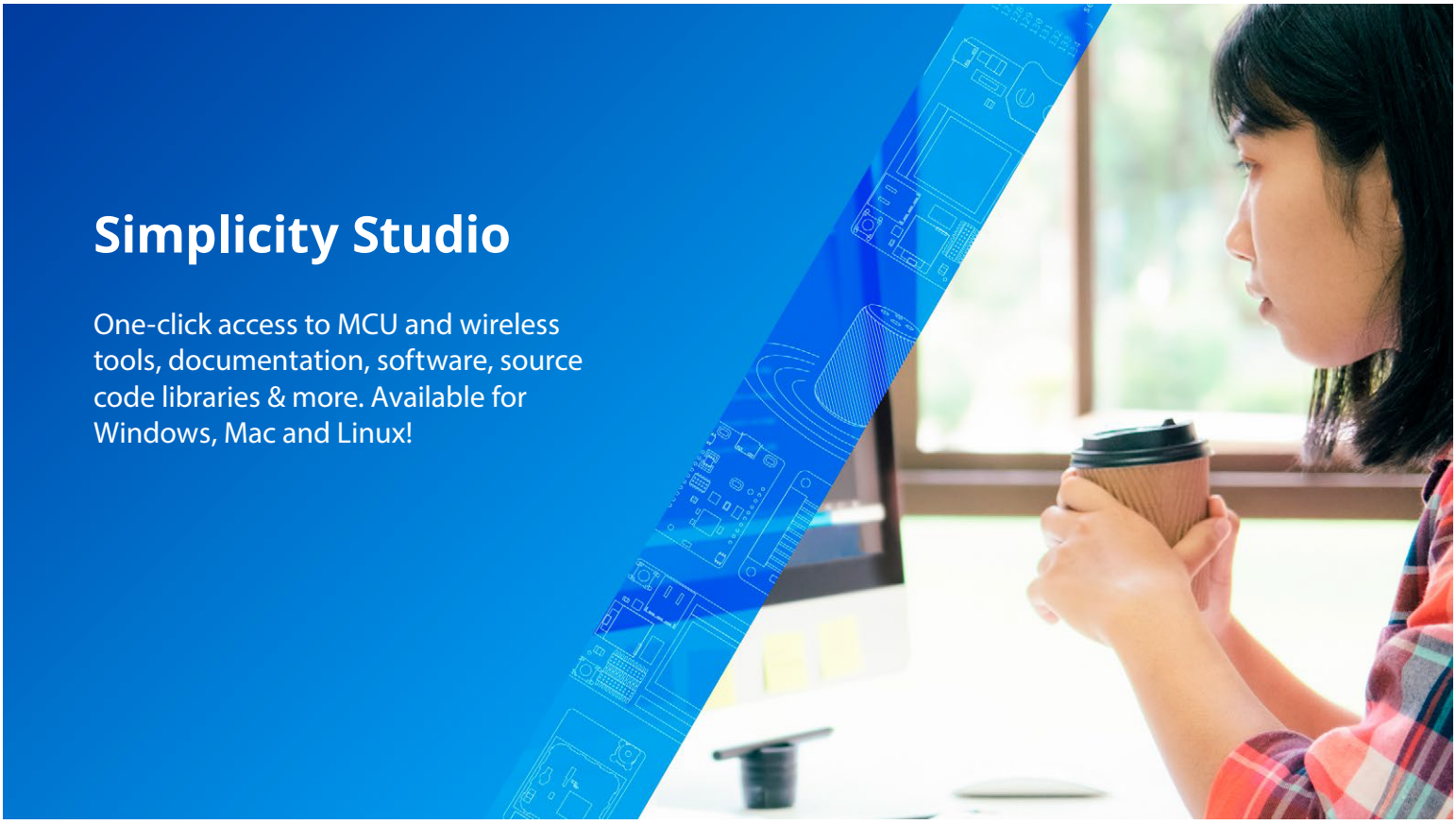

IoT Portfolio
www.silabs.com/IoT

SW/HW
www.silabs.com/simplicity

Quality
www.silabs.com/quality

Support & Community
www.silabs.com/community

Disclaimer
Silicon Labs intends to provide customers with the latest, accurate, and in-depth documentation of all peripherals and modules available for system and software implementers using or intending to use the Silicon Labs products. Characterization data, available modules and peripherals, memory sizes and memory addresses refer to each specific device, and "Typical" parameters provided can and do vary in different applications. Application examples described herein are for illustrative purposes only. Silicon Labs reserves the right to make changes without further notice to the product information, specifications, and descriptions herein, and does not give warranties as to the accuracy or completeness of the included information. Without prior notification, Silicon Labs may update product firmware during the manufacturing process for security or reliability reasons. Such changes will not alter the specifications or the performance of the product. Silicon Labs shall have no liability for the consequences of use of the information supplied in this document. This document does not imply or expressly grant any license to design or fabricate any integrated circuits. The products are not designed or authorized to be used within any FDA Class III devices, applications for which FDA premarket approval is required, or Life Support Systems without the specific written consent of Silicon Labs. A "Life Support System" is any product or system intended to support or sustain life and/or health, which, if it fails, can be reasonably expected to result in significant personal injury or death. Silicon Labs products are not designed or authorized for military applications. Silicon Labs products shall under no circumstances be used in weapons of mass destruction including (but not limited to) nuclear, biological or chemical weapons, or missiles capable of delivering such weapons. Silicon Labs disclaims all express and implied warranties and shall not be responsible or liable for any injuries or damages related to use of a Silicon Labs product in such unauthorized applications.

Trademark Information
Silicon Laboratories Inc.®, Silicon Laboratories®, Silicon Labs®, SiLabs® and the Silicon Labs logo®, Bluegiga®, Bluegiga Logo®, ClockBuilder®, CMEMS®, DSPLL®, EFM®, EFM32®, EFR, Ember®, Energy Micro, Energy Micro logo and combinations thereof, "the world's most energy friendly microcontrollers", Ember®, EZLink®, EZRadio®, EZRadioPRO®, Gecko®, Gecko OS, Gecko OS Studio, ISOmodem®, Precision32®, ProSLIC®, Simplicity Studio®, SiPHY®, Telegesis, the Telegesis Logo®, USBXpress®, Zentri, the Zentri logo and Zentri DMS, Z-Wave®, and others are trademarks or registered trademarks of Silicon Labs. ARM, CORTEX, Cortex-M3 and THUMB are trademarks or registered trademarks of ARM Holdings. Keil is a registered trademark of ARM Limited. Wi-Fi is a registered trademark of the Wi-Fi Alliance. All other products or brand names mentioned herein are trademarks of their respective holders.

SILICON LABS

Silicon Laboratories Inc.
400 West Cesar Chavez
Austin, TX 78701
USA

http://www.silabs.com